TOSHIBA

8 Bit Microcontroller

TLCS-870/C Series

TMP86P807NG

Not Recommended for New Design

TOSHIBA CORPORATION

The information contained herein is subject to change without notice. 021023 _ D

TOSHIBA is continually working to improve the quality and reliability of its products. Nevertheless, semiconductor devices in general can malfunction or fail due to their inherent electrical sensitivity and vulnerability to physical stress.
It is the responsibility of the buyer, when utilizing TOSHIBA products, to comply with the standards of safety in making a safe design for the entire system, and to avoid situations in which a malfunction or failure of such TOSHIBA products could cause loss of human life, bodily injury or damage to property.
In developing your designs, please ensure that TOSHIBA products are used within specified operating ranges as set forth in the most recent TOSHIBA products specifications.
Also, please keep in mind the precautions and conditions set forth in the "Handling Guide for Semiconductor Devices," or "TOSHIBA Semiconductor Reliability Handbook" etc. 021023_A

The Toshiba products listed in this document are intended for usage in general electronics applications (computer, personal equipment, office equipment, measuring equipment, industrial robotics, domestic appliances, etc.).
These Toshiba products are neither intended nor warranted for usage in equipment that requires extraordinarily high quality and/or reliability or a malfunction or failure of which may cause loss of human life or bodily injury ("Unintended Usage"). Unintended Usage include atomic energy control instruments, airplane or spaceship instruments, transportation instruments, traffic signal instruments, combustion control instruments, medical instruments, all types of safety devices, etc. Unintended Usage of Toshiba products listed in this document shall be made at the customer's own risk. 021023_B

The products described in this document shall not be used or embedded to any downstream products of which manufacture, use and/or sale are prohibited under any applicable laws and regulations. 060106_Q

The information contained herein is presented only as a guide for the applications of our products. No responsibility is assumed by TOSHIBA for any infringements of patents or other rights of the third parties which may result from its use. No license is granted by implication or otherwise under any patent or patent rights of TOSHIBA or others. 021023_C

The products described in this document may include products subject to the foreign exchange and foreign trade laws. 021023_F

For a discussion of how the reliability of microcontrollers can be predicted, please refer to Section 1.3 of the chapter entitled Quality and Reliability Assurance/Handling Precautions. 030619_S

Not Recommended for New Design

© 2006 TOSHIBA CORPORATION
All Rights Reserved

Revision History

Date	Revision	
2006/5/26	1	First Release
2006/9/26	2	Contents Revised
2007/3/1	3	Contents Revised
2007/7/7	4	Contents Revised
2008/8/29	5	Contents Revised

Not Recommended for New Design

Caution in Setting the UART Noise Rejection Time

When UART is used, settings of RXDNC are limited depending on the transfer clock specified by BRG. The combination "O" is available but please do not select the combination "–".

The transfer clock generated by timer/counter interrupt is calculated by the following equation :

Transfer clock [Hz] = Timer/counter source clock [Hz] ÷ TTREG set value

BRG setting	Transfer clock [Hz]	RXDNC setting			
		00 (No noise rejection)	01 (Reject pulses shorter than 31/fc[s] as noise)	10 (Reject pulses shorter than 63/fc[s] as noise)	11 (Reject pulses shorter than 127/fc[s] as noise)
000	fc/13	O	O	O	–
110 (When the transfer clock generated by timer/counter interrupt is the same as the right side column)	fc/8	O	–	–	–
	fc/16	O	O	–	–
	fc/32	O	O	O	–
The setting except the above		O	O	O	O

Not Recommended for New Design

Not Recommended
for New Design

Table of Contents

TMP86P807NG

1.1 Features 1
1.2 Pin Assignment 3
1.3 Block Diagram 4
1.4 Pin Names and Functions 5

2. Operational Description

2.1 CPU Core Functions 7
2.1.1 Memory Address Map 7
2.1.2 Program Memory (OTP) 7
2.1.3 Data Memory (RAM) 7
2.2 System Clock Controller 8
2.2.1 Clock Generator 8
2.2.2 Timing Generator 10
2.2.2.1 Configuration of timing generator
2.2.2.2 Machine cycle
2.2.3 Operation Mode Control Circuit 11
2.2.3.1 Single-clock mode
2.2.3.2 Dual-clock mode
2.2.3.3 STOP mode
2.2.4 Operating Mode Control 16
2.2.4.1 STOP mode
2.2.4.2 IDLE1/2 mode and SLEEP1/2 mode
2.2.4.3 IDLE0 and SLEEP0 modes (IDLE0, SLEEP0)
2.2.4.4 SLOW mode
2.3 Reset Circuit 29
2.3.1 External Reset Input 29
2.3.2 Address trap reset 30
2.3.3 Watchdog timer reset 30
2.3.4 System clock reset 30

3. Interrupt Control Circuit

3.1 Interrupt latches (IL15 to IL2) 33
3.2 Interrupt enable register (EIR) 34
3.2.1 Interrupt master enable flag (IMF) 34
3.2.2 Individual interrupt enable flags (EF15 to EF4) 34
3.3 Interrupt Source Selector (INTSEL) 37
3.4 Interrupt Sequence 37
3.4.1 Interrupt acceptance processing is packaged as follows. 37
3.4.2 Saving/restoring general-purpose registers 38
3.4.2.1 Using PUSH and POP instructions
3.4.2.2 Using data transfer instructions
3.4.3 Interrupt return 40
3.5 Software Interrupt (INTSW) 40
3.5.1 Address error detection 40
3.5.2 Debugging 41

Not Recommended for New Design

3.6 Undefined Instruction Interrupt (INTUNDEF) 41
3.7 Address Trap Interrupt (INTATRAP) 41
3.8 External Interrupts 41

4. Special Function Register (SFR)

4.1 SFR 45

5. I/O Ports

5.1 P0 (P07 to P00) Port (High Current) 48
5.2 P1 (P12 to P10) Port 49
5.3 P2 (P22 to P20) Port 50
5.4 P3 (P37 to P30) Port 51

6. Time Base Timer (TBT)

6.1 Time Base Timer 53
6.1.1 Configuration 53
6.1.2 Control 53
6.1.3 Function 54
6.2 Divider Output (DVO) 55
6.2.1 Configuration 55
6.2.2 Control 55

7. Watchdog Timer (WDT)

7.1 Watchdog Timer Configuration 57
7.2 Watchdog Timer Control 58
7.2.1 Malfunction Detection Methods Using the Watchdog Timer 58
7.2.2 Watchdog Timer Enable 59
7.2.3 Watchdog Timer Disable 60
7.2.4 Watchdog Timer Interrupt (INTWDT) 60
7.2.5 Watchdog Timer Reset 61
7.3 Address Trap 62
7.3.1 Selection of Address Trap in Internal RAM (ATAS) 62
7.3.2 Selection of Operation at Address Trap (ATOUT) 62
7.3.3 Address Trap Interrupt (INTATRAP) 62
7.3.4 Address Trap Reset 63

8. 16-Bit TimerCounter 1 (TC1)

8.1 Configuration 65
8.2 TimerCounter Control 66
8.3 Function 68
8.3.1 Timer mode 68
8.3.2 External Trigger Timer Mode 70
8.3.3 Event Counter Mode 72
8.3.4 Window Mode 73
8.3.5 Pulse Width Measurement Mode 74

Not Recommended for New Design

8.3.6 Programmable Pulse Generate (PPG) Output Mode 77

9. 8-Bit TimerCounter (TC3, TC4)

9.1 Configuration 81
9.2 TimerCounter Control 82
9.3 Function 87
9.3.1 8-Bit Timer Mode (TC3 and 4) 87
9.3.2 8-Bit Event Counter Mode (TC3, 4) 88
9.3.3 8-Bit Programmable Divider Output (PDO) Mode (TC3, 4) 88
9.3.4 8-Bit Pulse Width Modulation (PWM) Output Mode (TC3, 4) 91
9.3.5 16-Bit Timer Mode (TC3 and 4) 93
9.3.6 16-Bit Event Counter Mode (TC3 and 4) 94
9.3.7 16-Bit Pulse Width Modulation (PWM) Output Mode (TC3 and 4) 94
9.3.8 16-Bit Programmable Pulse Generate (PPG) Output Mode (TC3 and 4) 97
9.3.9 Warm-Up Counter Mode 99
9.3.9.1 Low-Frequency Warm-up Counter Mode (NORMAL1 → NORMAL2 → SLOW2 → SLOW1)
9.3.9.2 High-Frequency Warm-Up Counter Mode (SLOW1 → SLOW2 → NORMAL2 → NORMAL1)

10. Asynchronous Serial interface (UART)

10.1 Configuration 101
10.2 Control 102
10.3 Transfer Data Format 104
10.4 Transfer Rate 105
10.5 Data Sampling Method 105
10.6 STOP Bit Length 106
10.7 Parity 106
10.8 Transmit/Receive Operation 106
10.8.1 Data Transmit Operation 106
10.8.2 Data Receive Operation 106
10.9 Status Flag 107
10.9.1 Parity Error 107
10.9.2 Framing Error 107
10.9.3 Overrun Error 107
10.9.4 Receive Data Buffer Full 108
10.9.5 Transmit Data Buffer Empty 108
10.9.6 Transmit End Flag 109

11. Serial Expansion Interface (SEI)

11.1 Features 111
11.2 SEI Registers 112
11.2.1 SEI Control Register (SECR) 112
11.2.1.1 Transfer rate
11.2.2 SEI Status Register (SESR) 113
11.2.3 SEI Data Register (SEDR) 113
11.3 SEI Operation 114
11.3.1 Controlling SEI clock polarity and phase 114
11.3.2 SEI data and clock timing 114
11.4 SEI Pin Functions 115
11.4.1 SCLK pin 115
11.4.2 MISO/MOSI pins 115

Not Recommended for New Design

11.4.3 SS pin 115
11.5 SEI Transfer Formats 116
11.5.1 CPHA (SECR register bit 2) = 0 format 116
11.5.2 CPHA = 1 format 116
11.6 Functional Description 118
11.7 Interrupt Generation 119
11.8 SEI System Errors 119
11.8.1 Write collision error 119
11.8.2 Overflow error 119
11.9 Bus Driver Protection 120

12. 8-Bit AD Converter (ADC)

12.1 Configuration 121
12.2 Control 122
12.3 Function 124
12.3.1 AD Conveter Operation 124
12.3.2 AD Converter Operation 124
12.3.3 STOP and SLOW Mode during AD Conversion 125
12.3.4 Analog Input Voltage and AD Conversion Result 126
12.4 Precautions about AD Converter 127
12.4.1 Analog input pin voltage range 127
12.4.2 Analog input shared pins 127
12.4.3 Noise countermeasure 127

13. Key-on Wakeup (KWU)

13.1 Configuration 129
13.2 Control 130

14. OTP operation

14.1 Operating mode 131
14.1.1 MCU mode 131
14.1.1.1 Program Memory
14.1.1.2 Data Memory
14.1.1.3 Input/Output Circuiry
14.1.2 PROM mode 132
14.1.2.1 Programming Flowchart (High-speed program writing)
14.1.2.2 Program Writing using a General-purpose PROM Programmer

15. Input/Output Circuitry

15.1 Control Pins 137
15.2 Input/Output Ports 138

16. Electrical Characteristics

16.1 Absolute Maximum Ratings 139
16.2 Operating Condition 140
16.3 DC Characteristics 141

Not Recommended for New Design

16.4 AD Conversion Characteristics 142
16.5 SEI Operating Condition (Slave mode) 142
16.6 AC Characteristics 143
16.7 DC Characteristics, AC Characteristics (PROM mode) 144
16.7.1 Read operation in PROM mode 144
16.7.2 Program operation (High-speed) (Topr = 25 ± 5°C) 145
16.8 Recommended Oscillation Conditions 146
16.9 Handling Precaution 146

17. Package Dimensions

This is a technical document that describes the operating functions and electrical specifications of the 8-bit microcontroller series TLCS-870/C (LSI).

Not Recommended for New Design

Not Recommended
for New Design

CMOS 8-Bit Microcontroller

TMP86P807NG

The TMP86P807NG is a single-chip 8-bit high-speed and high-functionality microcomputer incorporating 8192 bytes of One-Time PROM. It is pin-compatible with the TMP86C807NG/TMP86C407NG (Mask ROM version). The TMP86P807NG can realize operations equivalent to those of the TMP86C807NG/TMP86C407NG by programming the on-chip PROM.

Product No.	ROM (EPROM)	RAM	Package	MaskROM MCU	Emulation Chip
TMP86P807NG	8192 bytes	256 bytes	SDIP28-P-400-1.78	TMP86C807NG/ TMP86C407NG	TMP86C908XB

1.1 Features

1. 8-bit single chip microcomputer TLCS-870/C series
   - Instruction execution time :

     0.25 μs (at 16 MHz)

     122 μs (at 32.768 kHz)
   - 132 types & 731 basic instructions
2. 17interrupt sources (External : 5 Internal : 12)
3. Input / Output ports (22 pins)

   Large current output: 8pins (Typ. 20mA), LED direct drive
4. Prescaler
   - Time base timer
   - Divider output function
5. Watchdog Timer
6. 16-bit timer counter: 1 ch
   - Timer, External trigger, Window, Pulse width measurement,

     Event counter, Programmable pulse generate (PPG) modes
7. 8-bit timer counter : 2 ch
   - Timer, Event counter, Programmable divider output (PDO),

Not Recommended for New Design

060116EBP

- The information contained herein is subject to change without notice. 021023_D
- TOSHIBA is continually working to improve the quality and reliability of its products. Nevertheless, semiconductor devices in general can malfunction or fail due to their inherent electrical sensitivity and vulnerability to physical stress. It is the responsibility of the buyer, when utilizing TOSHIBA products, to comply with the standards of safety in making a safe design for the entire system, and to avoid situations in which a malfunction or failure of such TOSHIBA products could cause loss of human life, bodily injury or damage to property.
  In developing your designs, please ensure that TOSHIBA products are used within specified operating ranges as set forth in the most recent TOSHIBA products specifications. Also, please keep in mind the precautions and conditions set forth in the “Handling Guide for Semiconductor Devices,” or “TOSHIBA Semiconductor Reliability Handbook” etc. 021023_A
- The TOSHIBA products listed in this document are intended for usage in general electronics applications (computer, personal equipment, office equipment, measuring equipment, industrial robotics, domestic appliances, etc.). These TOSHIBA products are neither intended nor warranted for usage in equipment that requires extraordinarily high quality and/or reliability or a malfunctionor failure of which may cause loss of human life or bodily injury (“Unintended Usage”). Unintended Usage include atomic energy control instruments, airplane or spaceship instruments, transportation instruments, traffic signal instruments, combustion control instruments, medical instruments, all types of safety devices, etc. Unintended Usage of TOSHIBA products listed in this document shall be made at the customer's own risk. 021023_B
- The products described in this document shall not be used or embedded to any downstream products of which manufacture, use and/or sale are prohibited under any applicable laws and regulations. 060106_Q
- The information contained herein is presented only as a guide for the applications of our products. No responsibility is assumed by TOSHIBA for any infringements of patents or other rights of the third parties which may result from its use. No license is granted by implication or otherwise under any patent or patent rights of TOSHIBA or others. 021023_C
- The products described in this document are subject to the foreign exchange and foreign trade laws. 021023_E
- For a discussion of how the reliability of microcontrollers can be predicted, please refer to Section 1.3 of the chapter entitled Quality and Reliability Assurance/Handling Precautions. 030619_S

Pulse width modulation (PWM) output,

Programmable pulse generation (PPG) modes

8. 8-bit UART : 1 ch
9. 8bit Serial Expansion Interface (SEI): 1 channel

   (MSB/LSB selectable and max. 4Mbps at 16MHz)
10. 8-bit successive approximation type AD converter (with sample hold)

    Analog inputs: 6ch
11. Key-on wakeup : 4 channels
12. Clock operation

    Single clock mode

    Dual clock mode
13. Low power consumption operation

    STOP mode: Oscillation stops. (Battery/Capacitor back-up.)

    SLOW1 mode: Low power consumption operation using low-frequency clock.(High-frequency clock stop.)

    SLOW2 mode: Low power consumption operation using low-frequency clock.(High-frequency clock oscillate.)

    IDLE0 mode: CPU stops, and only the Time-Based-Timer(TBT) on peripherals operate using high frequency clock. Release by falling edge of the source clock which is set by TBTCR<TBTCK>.

    IDLE1 mode: CPU stops and peripherals operate using high frequency clock. Release by interruputs(CPU restarts).

    IDLE2 mode: CPU stops and peripherals operate using high and low frequency clock. Release by interruputs. (CPU restarts).

    SLEEP0 mode: CPU stops, and only the Time-Based-Timer(TBT) on peripherals operate using low frequency clock.Release by falling edge of the source clock which is set by TBTCR<TBTCK>.

    SLEEP1 mode: CPU stops, and peripherals operate using low frequency clock. Release by interruput.(CPU restarts).

    SLEEP2 mode: CPU stops and peripherals operate using high and low frequency clock. Release by interruput.
14. Wide operation voltage:

    4.5 V to 5.5 V at 16MHz /32.768 kHz

    2.7 V to 5.5 V at 8 MHz /32.768 kHz

Not Recommended for New Design

1.2 Pin Assignment

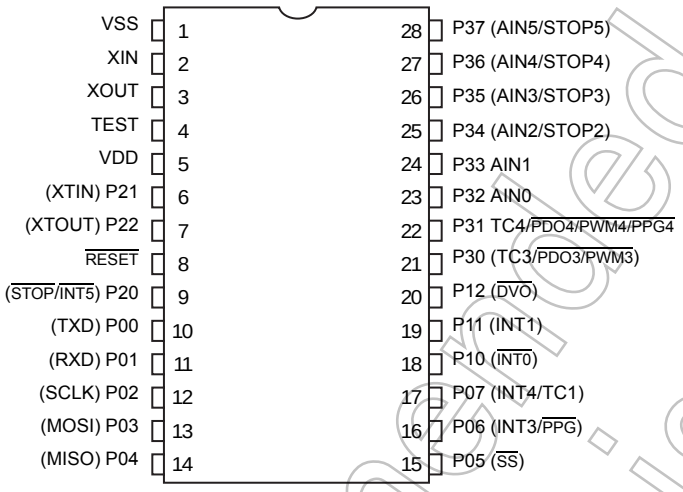

Figure 1-1 Pin Assignment

Not Recommended for New Design

1.3 Block Diagram

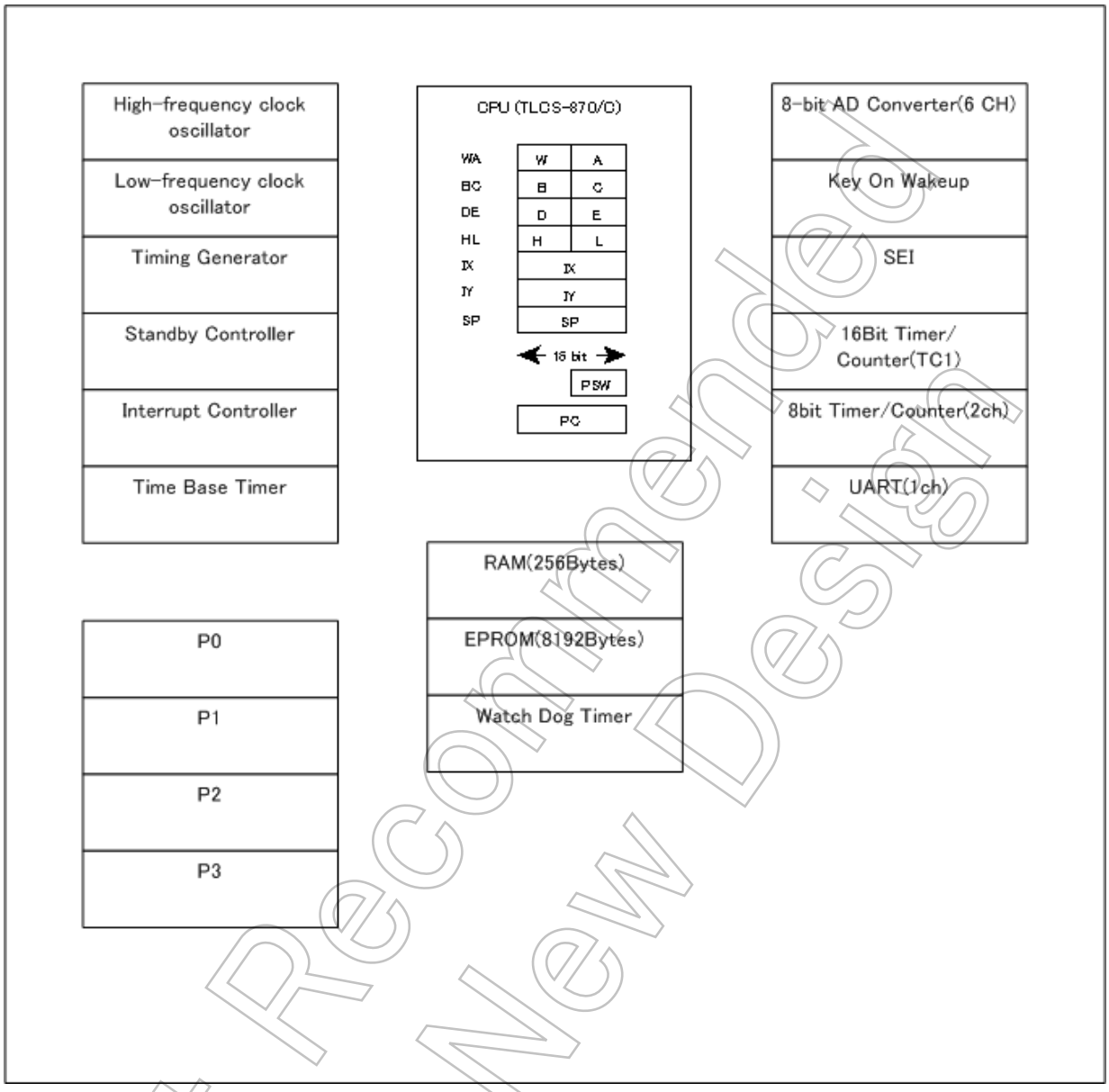

Figure 1-2 Block Diagram

Not Recommended for New Design

1.4 Pin Names and Functions

The TMP86P807NG has MCU mode and PROM mode. Table 1-1 shows the pin functions in MCU mode. The PROM mode is explained later in a separate chapter.

Table 1-1 Pin Names and Functions(1/2)

Pin Name	Pin Number	Input/Output	Functions
P07 INT4 TC1	17	IO I I	PORT07 External interrupt 4 input TC1 input
P06 INT3 $\overline{PPG}$	16	IO I O	PORT06 External interrupt 3 input PPG output
P05 $\overline{SS}$	15	IO I	PORT05 SEI master/slave select input
P04 MISO	14	IO I	PORT04 SEI master input, slave output
P03 MOSI	13	IO I	PORT03 SEI master input, slave output
P02 SCLK	12	IO IO	PORT02 SEI serial clock input/output pin
P01 RXD	11	IO I	PORT01 UART data input
P00 TXD	10	IO O	PORT00 UART data output
P12 $\overline{DVO}$	20	IO O	PORT12 Divider Output
P11 INT1	19	IO I	PORT11 External interrupt 1 input
P10 $\overline{INT0}$	18	IO I	PORT10 External interrupt 0 input
P22 XTOUT	7	IO O	PORT22 Resonator connecting pins(32.768kHz) for inputting external clock
P21 XTIN	6	IO I	PORT21 Resonator connecting pins(32.768kHz) for inputting external clock
P20 $\overline{INT5}$ $\overline{STOP}$	9	IO I I	PORT20 External interrupt 5 input STOP mode release signal input
P37 AIN5 STOP5	28	IO I I	PORT37 AD converter analog input 5 STOP5
P36 AIN4 STOP4	27	IO I I	PORT36 AD converter analog input 4 STOP4
P35 AIN3 STOP3	26	IO I I	PORT35 AD converter analog input 3 STOP3

Not Recommended for New Design

Table 1-1 Pin Names and Functions(2/2)

Pin Name	Pin Number	Input/Output	Functions
P34 AIN2 STOP2	25	IO I I	PORT34 AD converter analog input 2 STOP2
P33 AIN1	24	IO I	PORT33 AD converter analog input 1
P32 AIN0	23	IO I	PORT32 AD converter analog input 0
P31 TC4 $\overline{\text{PDO4/PWM4/PPG4}}$	22	IO I O	PORT31 TC4 input PDO4/PWM4/PPG4 output
P30 TC3 $\overline{\text{PDO3/PWM3}}$	21	IO I O	PORT30 TC3 input PDO3/PWM3 output
XIN	2	I	Resonator connecting pins for high-frequency clock
XOUT	3	O	Resonator connecting pins for high-frequency clock
$\overline{\text{RESET}}$	8	I	Reset signal
TEST	4	I	Test pin for out-going test. Normally, be fixed to low.
VDD	5	I	+5V
VSS	1	I	0(GND)

Not Recommended for New Design

2. Operational Description

2.1 CPU Core Functions

The CPU core consists of a CPU, a system clock controller, and an interrupt controller.

This section provides a description of the CPU core, the program memory, the data memory, and the reset circuit.

2.1.1 Memory Address Map

The TMP86P807NG memory is composed OTP, RAM and SFR(Special function register). They are all mapped in 64-Kbyte address space. Figure 2-1 shows the TMP86P807NG memory address map.

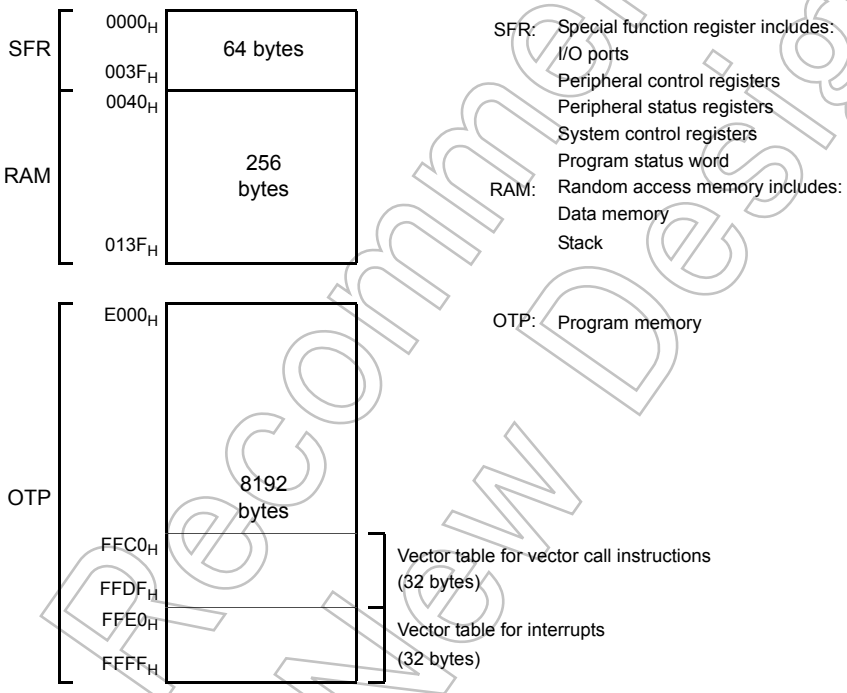

Figure 2-1 Memory Address Map

2.1.2 Program Memory (OTP)

The TMP86P807NG has a 8192 bytes (Address E000H to FFFFH) of program memory (OTP).

2.1.3 Data Memory (RAM)

The TMP86P807NG has 256bytes (Address 0040H to 013FH) of internal RAM. The first 192 bytes (0040H to 00FFH) of the internal RAM are located in the direct area; instructions with shorten operations are available against such an area.

The data memory contents become unstable when the power supply is turned on; therefore, the data memory should be initialized by an initialization routine.

Not Recommended for New Design

Example :Clears RAM to “00H”. (TMP86P807NG)

```
            LD      HL, 0040H       ; Start address setup
            LD      A, H            ; Initial value (00H) setup
            LD      BC, 00FFH
SRAMCLR:    LD      (HL), A
            INC     HL
            DEC     BC
            JRS     F, SRAMCLR
```

2.2 System Clock Controller

The system clock controller consists of a clock generator, a timing generator, and a standby controller.

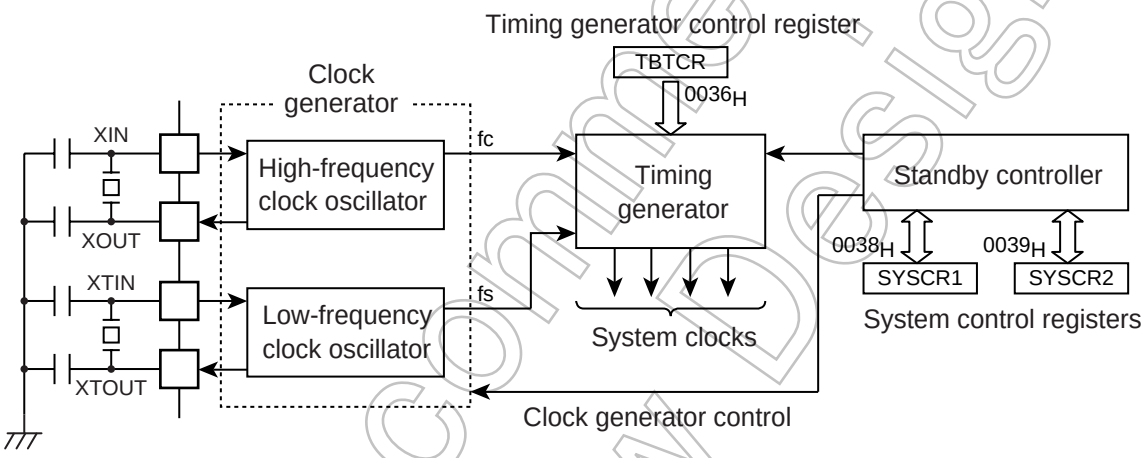

Figure 2-2 System Colck Control

2.2.1 Clock Generator

The clock generator generates the basic clock which provides the system clocks supplied to the CPU core and peripheral hardware. It contains two oscillation circuits: One for the high-frequency clock and one for the low-frequency clock. Power consumption can be reduced by switching of the standby controller to low-power operation based on the low-frequency clock.

The high-frequency (fc) clock and low-frequency (fs) clock can easily be obtained by connecting a resonator between the XIN/XOUT and XTIN/XTOUT pins respectively. Clock input from an external oscillator is also possible. In this case, external clock is applied to XIN/XTIN pin with XOUT/XTOUT pin not connected.

Not Recommended for New Design

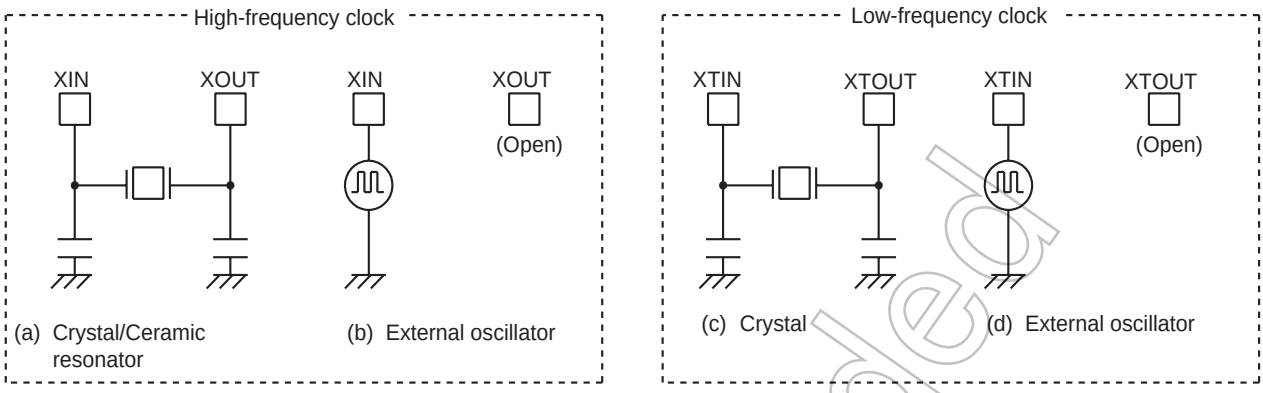

Figure 2-3 Examples of Resonator Connection

Note: The function to monitor the basic clock directly at external is not provided for hardware, however, with disabling all interrupts and watchdog timers, the oscillation frequency can be adjusted by monitoring the pulse which the fixed frequency is outputted to the port by the program.
The system to require the adjustment of the oscillation frequency should create the program for the adjustment in advance.

Not Recommended for New Design

2.2.2 Timing Generator

The timing generator generates the various system clocks supplied to the CPU core and peripheral hardware from the basic clock (fc or fs). The timing generator provides the following functions.

1. Generation of main system clock
2. Generation of divider output ($\overline{DVO}$) pulses
3. Generation of source clocks for time base timer
4. Generation of source clocks for watchdog timer
5. Generation of internal source clocks for timer/counters
6. Generation of warm-up clocks for releasing STOP mode

2.2.2.1 Configuration of timing generator

The timing generator consists of a 2-stage prescaler, a 21-stage divider, a main system clock generator, and machine cycle counters.

An input clock to the 7th stage of the divider depends on the operating mode, SYSCR2<SYSCK> and TBTCR<DV7CK>, that is shown in Figure 2-4. As reset and STOP mode started/canceled, the prescaler and the divider are cleared to “0”.

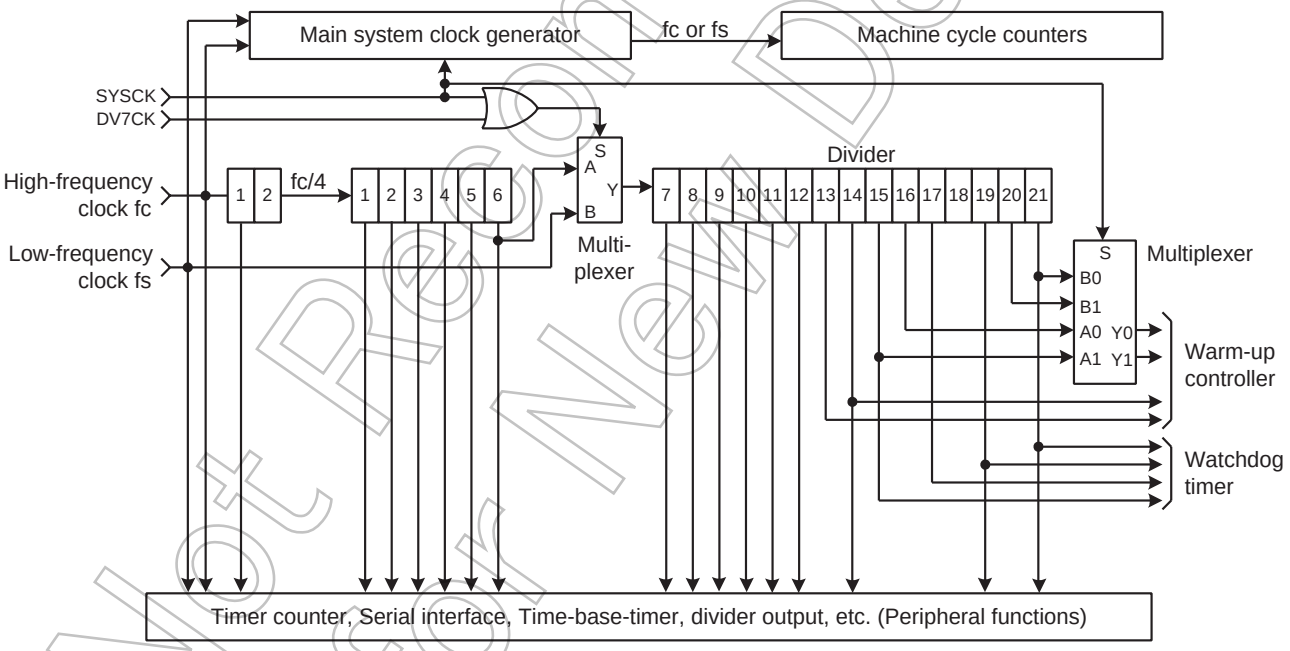

Figure 2-4 Configuration of Timing Generator

Not Recommended for New Design

Timing Generator Control Register

TBTCR (0036H)	7	6	5	4	3	2	1	0	
	(DVOEN)	(DVOCK)		DV7CK	(TBTEN)	(TBTCK)			(Initial value: 0000 0000)

DV7CK	Selection of input to the 7th stage of the divider	0: $fc/2^8$ [Hz] 1: fs	R/W

Note 1: In single clock mode, do not set DV7CK to "1".
Note 2: Do not set "1" on DV7CK while the low-frequency clock is not operated stably.
Note 3: fc: High-frequency clock [Hz], fs: Low-frequency clock [Hz], *: Don't care
Note 4: In SLOW1/2 and SLEEP1/2 modes, the DV7CK setting is ineffective, and fs is input to the 7th stage of the divider.
Note 5: When STOP mode is entered from NORMAL1/2 mode, the DV7CK setting is ineffective during the warm-up period after release of STOP mode, and the 6th stage of the divider is input to the 7th stage during this period.

2.2.2.2 Machine cycle

Instruction execution and peripheral hardware operation are synchronized with the main system clock.

The minimum instruction execution unit is called an "machine cycle". There are a total of 10 different types of instructions for the TLCS-870/C Series: Ranging from 1-cycle instructions which require one machine cycle for execution to 10-cycle instructions which require 10 machine cycles for execution. A machine cycle consists of 4 states (S0 to S3), and each state consists of one main system clock.

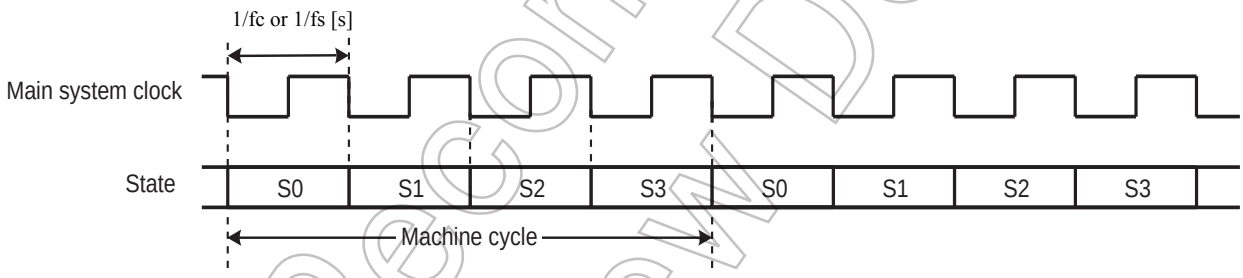

Figure 2-5 Machine Cycle

2.2.3 Operation Mode Control Circuit

The operation mode control circuit starts and stops the oscillation circuits for the high-frequency and low-frequency clocks, and switches the main system clock. There are three operating modes: Single clock mode, dual clock mode and STOP mode. These modes are controlled by the system control registers (SYSCR1 and SYSCR2). Figure 2-6 shows the operating mode transition diagram.

2.2.3.1 Single-clock mode

Only the oscillation circuit for the high-frequency clock is used, and P21 (XTIN) and P22 (XTOUT) pins are used as input/output ports. The main-system clock is obtained from the high-frequency clock. In the single-clock mode, the machine cycle time is 4/fc [s].

(1) NORMAL1 mode

In this mode, both the CPU core and on-chip peripherals operate using the high-frequency clock. The TMP86P807NG is placed in this mode after reset.

Not Recommended for New Design

(2) IDLE1 mode

In this mode, the internal oscillation circuit remains active. The CPU and the watchdog timer are halted; however on-chip peripherals remain active (Operate using the high-frequency clock).

IDLE1 mode is started by SYSCR2<IDLE> = "1", and IDLE1 mode is released to NORMAL1 mode by an interrupt request from the on-chip peripherals or external interrupt inputs. When the IMF (Interrupt master enable flag) is “1” (Interrupt enable), the execution will resume with the acceptance of the interrupt, and the operation will return to normal after the interrupt service is completed. When the IMF is “0” (Interrupt disable), the execution will resume with the instruction which follows the IDLE1 mode start instruction.

(3) IDLE0 mode

In this mode, all the circuit, except oscillator and the timer-base-timer, stops operation.

This mode is enabled by SYSCR2<TGHALT> = "1".

When IDLE0 mode starts, the CPU stops and the timing generator stops feeding the clock to the peripheral circuits other than TBT. Then, upon detecting the falling edge of the source clock selected with TBTCR<TBTCK>, the timing generator starts feeding the clock to all peripheral circuits.

When returned from IDLE0 mode, the CPU restarts operating, entering NORMAL1 mode back again. IDLE0 mode is entered and returned regardless of how TBTCR<TBTEN> is set. When IMF = “1”, EF6 (TBT interrupt individual enable flag) = “1”, and TBTCR<TBTEN> = “1”, interrupt processing is performed. When IDLE0 mode is entered while TBTCR<TBTEN> = “1”, the INTTBT interrupt latch is set after returning to NORMAL1 mode.

2.2.3.2 Dual-clock mode

Both the high-frequency and low-frequency oscillation circuits are used in this mode. P21 (XTIN) and P22 (XTOUT) pins cannot be used as input/output ports. The main system clock is obtained from the high-frequency clock in NORMAL2 and IDLE2 modes, and is obtained from the low-frequency clock in SLOW and SLEEP modes. The machine cycle time is 4/fc [s] in the NORMAL2 and IDLE2 modes, and 4/fs [s] (122 μs at fs = 32.768 kHz) in the SLOW and SLEEP modes.

The TLCS-870/C is placed in the signal-clock mode during reset. To use the dual-clock mode, the low-frequency oscillator should be turned on at the start of a program.

(1) NORMAL2 mode

In this mode, the CPU core operates with the high-frequency clock. On-chip peripherals operate using the high-frequency clock and/or low-frequency clock.

(2) SLOW2 mode

In this mode, the CPU core operates with the low-frequency clock, while both the high-frequency clock and the low-frequency clock are operated. As the SYSCR2<SYSCK> becomes "1", the hardware changes into SLOW2 mode. As the SYSCR2<SYSCK> becomes “0”, the hardware changes into NORMAL2 mode. As the SYSCR2<XEN> becomes “0”, the hardware changes into SLOW1 mode. Do not clear SYSCR2<XTEN> to “0” during SLOW2 mode.

(3) SLOW1 mode

This mode can be used to reduce power-consumption by turning off oscillation of the high-frequency clock. The CPU core and on-chip peripherals operate using the low-frequency clock.

Not Recommended for New Design

Switching back and forth between SLOW1 and SLOW2 modes are performed by SYSCR2<XEN>. In SLOW1 and SLEEP modes, the input clock to the 1st stage of the divider is stopped; output from the 1st to 6th stages is also stopped.

(4) IDLE2 mode

In this mode, the internal oscillation circuit remain active. The CPU and the watchdog timer are halted; however, on-chip peripherals remain active (Operate using the high-frequency clock and/or the low-frequency clock). Starting and releasing of IDLE2 mode are the same as for IDLE1 mode, except that operation returns to NORMAL2 mode.

(5) SLEEP1 mode

In this mode, the internal oscillation circuit of the low-frequency clock remains active. The CPU, the watchdog timer, and the internal oscillation circuit of the high-frequency clock are halted; however, on-chip peripherals remain active (Operate using the low-frequency clock). Starting and releasing of SLEEP mode are the same as for IDLE1 mode, except that operation returns to SLOW1 mode. In SLOW1 and SLEEP1 modes, the input clock to the 1st stage of the divider is stopped; output from the 1st to 6th stages is also stopped.

(6) SLEEP2 mode

The SLEEP2 mode is the idle mode corresponding to the SLOW2 mode. The status under the SLEEP2 mode is same as that under the SLEEP1 mode, except for the oscillation circuit of the high-frequency clock.

(7) SLEEP0 mode

In this mode, all the circuit, except oscillator and the timer-base-timer, stops operation. This mode is enabled by setting “1” on bit SYSCR2<TGHALT>.

When SLEEP0 mode starts, the CPU stops and the timing generator stops feeding the clock to the peripheral circuits other than TBT. Then, upon detecting the falling edge of the source clock selected with TBTCR<TBTCK>, the timing generator starts feeding the clock to all peripheral circuits.

When returned from SLEEP0 mode, the CPU restarts operating, entering SLOW1 mode back again. SLEEP0 mode is entered and returned regardless of how TBTCR<TBTEN> is set. When IMF = “1”, EF6 (TBT interrupt individual enable flag) = “1”, and TBTCR<TBTEN> = “1”, interrupt processing is performed. When SLEEP0 mode is entered while TBTCR<TBTEN> = “1”, the INTTBT interrupt latch is set after returning to SLOW1 mode.

2.2.3.3 STOP mode

In this mode, the internal oscillation circuit is turned off, causing all system operations to be halted. The internal status immediately prior to the halt is held with a lowest power consumption during STOP mode.

STOP mode is started by the system control register 1 (SYSCR1), and STOP mode is released by a inputting (Either level-sensitive or edge-sensitive can be programmably selected) to the $\overline{\text{STOP}}$ pin. After the warm-up period is completed, the execution resumes with the instruction which follows the STOP mode start instruction.

Not Recommended for New Design

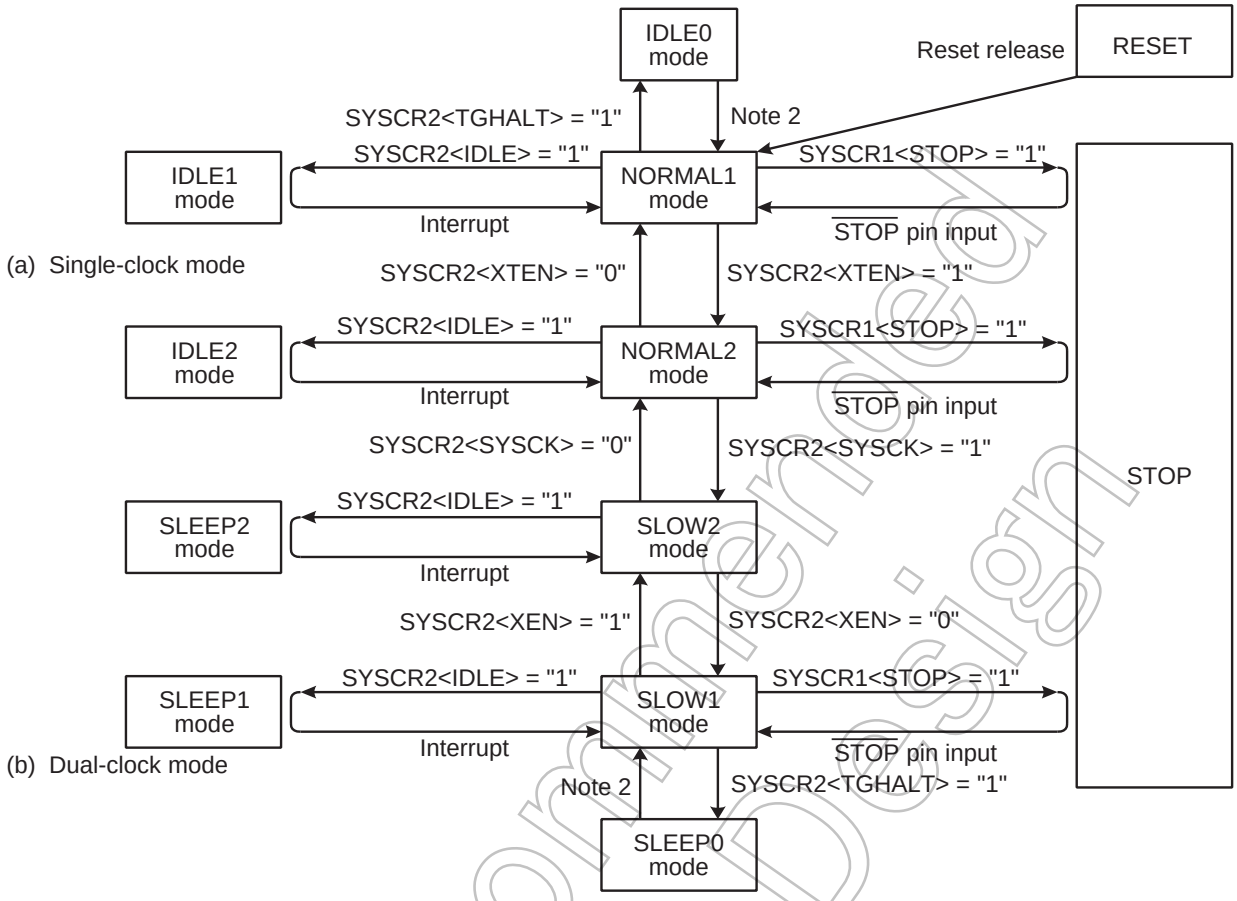

Note 1: NORMAL1 and NORMAL2 modes are generically called NORMAL; SLOW1 and SLOW2 are called SLOW; IDLE0, IDLE1 and IDLE2 are called IDLE; SLEEP0, SLEEP1 and SLEEP2 are called SLEEP.

Note 2: The mode is released by falling edge of TBTCR<TBTCK> setting.

Figure 2-6 Operating Mode Transition Diagram

Table 2-1 Operating Mode and Conditions

Operating Mode		Oscillator		CPU Core	TBT	Other Peripherals	Machine Cycle Time
		High Frequency	Low Frequency				
Single clock	RESET	Oscillation	Stop	Reset	Reset	Reset	4/fc [s]
	NORMAL1			Operate	Operate	Operate	
	IDLE1			Halt			
	IDLE0					Halt	
	STOP	Stop			Halt		–
Dual clock	NORMAL2	Oscillation	Oscillation	Operate with high frequency	Operate	Operate	4/fc [s]
	IDLE2			Halt			
	SLOW2			Operate with low frequency			4/fs [s]
	SLEEP2			Halt			
	SLOW1	Stop		Operate with low frequency			
	SLEEP1			Halt			
	SLEEP0					Halt	
	STOP		Stop		Halt		–

Not Recommended for New Design

System Control Register 1

SYSCR1 (0038H)	7	6	5	4	3	2	1	0
	STOP	RELM	RETM	OUTEN	WUT			

(Initial value: 0000 00**)

STOP	STOP mode start	0: CPU core and peripherals remain active 1: CPU core and peripherals are halted (Start STOP mode)			R/W
RELM	Release method for STOP mode	0: Edge-sensitive release 1: Level-sensitive release			R/W
RETM	Operating mode after STOP mode	0: Return to NORMAL1/2 mode 1: Return to SLOW1 mode			R/W
OUTEN	Port output during STOP mode	0: High impedance 1: Output kept			R/W
WUT	Warm-up time at releasing STOP mode		Return to NORMAL mode	Return to SLOW mode	R/W
		00	3×2^{16}/fc	3×2^{13}/fs	
		01	2^{16}/fc	2^{13}/fs	
		10	3×2^{14}/fc	3×2^{6}/fs	
		11	2^{14}/fc	2^{6}/fs	

Note 1: Always set RETM to “0” when transiting from NORMAL mode to STOP mode. Always set RETM to “1” when transiting from SLOW mode to STOP mode.

Note 2: When STOP mode is released with $\overline{\text{RESET}}$ pin input, a return is made to NORMAL1 regardless of the RETM contents.

Note 3: fc: High-frequency clock [Hz], fs: Low-frequency clock [Hz], *; Don’t care

Note 4: Bits 0 and 1 in SYSCR1 are read as undefined data when a read instruction is executed.

Note 5: As the hardware becomes STOP mode under OUTEN = “0”, input value is fixed to “0”; therefore it may cause external interrupt request on account of falling edge.

Note 6: When the key-on wakeup is used, RELM should be set to "1".

Note 7: In case of setting as STOP mode is released by a rising edge of $\overline{\text{STOP}}$ pin input, the release setting by STOP5 to STOP2 on STOPCR register is prohibited.

Note 8: Port P20 is used as $\overline{\text{STOP}}$ pin. Therefore, when stop mode is started, OUTEN does not affect to P20, and P20 becomes High-Z mode.

Note 9: The warmig-up time should be set correctly for using oscillator.

System Control Register 2

SYSCR2 (0039H)	7	6	5	4	3	2	1	0
	XEN	XTEN	SYSCK	IDLE		TGHALT		

(Initial value: 1000 *0**)

XEN	High-frequency oscillator control	0: Turn off oscillation 1: Turn on oscillation	R/W
XTEN	Low-frequency oscillator control	0: Turn off oscillation 1: Turn on oscillation	
SYSCK	Main system clock select (Write)/main system clock monitor (Read)	0: High-frequency clock (NORMAL1/NORMAL2/IDLE1/IDLE2) 1: Low-frequency clock (SLOW1/SLOW2/SLEEP1/SLEEP2)	
IDLE	CPU and watchdog timer control (IDLE1/2 and SLEEP1/2 modes)	0: CPU and watchdog timer remain active 1: CPU and watchdog timer are stopped (Start IDLE1/2 and SLEEP1/2 modes)	R/W
TGHALT	TG control (IDLE0 and SLEEP0 modes)	0: Feeding clock to all peripherals from TG 1: Stop feeding clock to peripherals except TBT from TG. (Start IDLE0 and SLEEP0 modes)	

Note 1: A reset is applied if both XEN and XTEN are cleared to “0”, XEN is cleared to “0” when SYSCK = “0”, or XTEN is cleared to “0” when SYSCK = “1”.

Note 2: *: Don’t care, TG: Timing generator

Note 3: Bits 3, 1 and 0 in SYSCR2 are always read as undefined value.

Note 4: Do not set IDLE and TGHALT to “1” simultaneously.

Note 5: Because returning from IDLE0/SLEEP0 to NORMAL1/SLOW1 is executed by the asynchronous internal clock, the period of IDLE0/SLEEP0 mode might be shorter than the period setting by TBTCR<TBTCK>.

Note 6: When IDLE1/2 or SLEEP1/2 mode is released, IDLE is automatically cleared to “0”.

Note 7: When IDLE0 or SLEEP0 mode is released, TGHALT is automatically cleared to “0”.

Not Recommended for New Design

Note 8: Before setting TGHALT to “1”, be sure to stop peripherals. If peripherals are not stopped, the interrupt latch of peripherals may be set after IDLE0 or SLEEP0 mode is released.

2.2.4 Operating Mode Control

2.2.4.1 STOP mode

STOP mode is controlled by the system control register 1, the $\overline{\text{STOP}}$ pin input and key-on wakeup input (STOP5 to STOP2) which are controlled by the STOP mode release control register (STOPCR).
The $\overline{\text{STOP}}$ pin is also used both as a port P20 and an $\overline{\text{INT5}}$ (external interrupt input 5) pin. STOP mode is started by setting SYSCR1<STOP> to “1”. During STOP mode, the following status is maintained.

1. Oscillations are turned off, and all internal operations are halted.
2. The data memory, registers, the program status word and port output latches are all held in the status in effect before STOP mode was entered.
3. The prescaler and the divider of the timing generator are cleared to “0”.
4. The program counter holds the address 2 ahead of the instruction (e.g., [SET (SYSCR1).7]) which started STOP mode.

STOP mode includes a level-sensitive mode and an edge-sensitive mode, either of which can be selected with the SYSCR1<RELM>. Do not use any key-on wakeup input (STOP5 to STOP2) for releasing STOP mode in edge-sensitive mode.

Note 1: The STOP mode can be released by either the STOP or key-on wakeup pins (STOP5 to STOP2). However, because the STOP pin is different from the key-on wakeup and can not inhibit the release input, the STOP pin must be used for releasing STOP mode.

Note 2: During STOP period (from start of STOP mode to end of warm up), due to changes in the external interrupt pin signal, interrupt latches may be set to “1” and interrupts may be accepted immediately after STOP mode is released. Before starting STOP mode, therefore, disable interrupts. Also, before enabling interrupts after STOP mode is released, clear unnecessary interrupt latches.

(1) Level-sensitive release mode (RELM = “1”)

In this mode, STOP mode is released by setting the $\overline{\text{STOP}}$ pin high or detecting high or low edge input for the STOP5 to STOP2 pins which are enabled by STOPCR. This mode is used for capacitor backup when the main power supply is cut off and long term battery backup.

Even if an instruction for starting STOP mode is executed while $\overline{\text{STOP}}$ pin input is high, STOP mode does not start but instead the warm-up sequence starts immediately. Thus, to start STOP mode in the level-sensitive release mode, it is necessary for the program to first confirm that the $\overline{\text{STOP}}$ pin input is low. The following two methods can be used for confirmation.

1. Testing a port.
2. Using an external interrupt input $\overline{\text{INT5}}$ ($\overline{\text{INT5}}$ is a falling edge-sensitive input).

Example 1 :Starting STOP mode from NORMAL mode by testing a port P20.

```
        LD      (SYSCR1), 01010000B     ; Sets up the level-sensitive release mode
SSTOPH: TEST    (P2PRD). 0              ; Wait until the STOP pin input goes low level
        JRS     F, SSTOPH
        DI                              ; IMF ← 0
        SET     (SYSCR1). 7             ; Starts STOP mode
```

Not Recommended for New Design

Example 2 :Starting STOP mode from NORMAL mode with an INT5 interrupt.

```
PINT5:    TEST    (P2PRD). 0          ; To reject noise, STOP mode does not start if
          JRS     F, SINT5              port P20 is at high
          LD      (SYSCR1), 01010000B ; Sets up the level-sensitive release mode.
          DI                          ; IMF ← 0
          SET     (SYSCR1). 7         ; Starts STOP mode
SINT5:    RETI
```

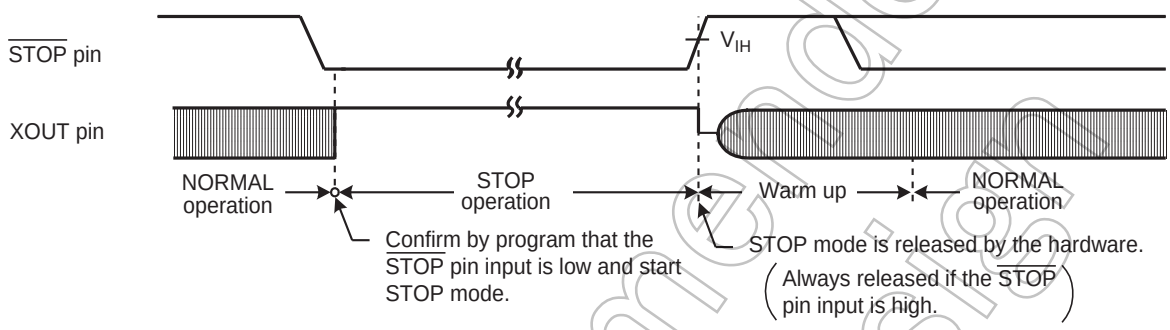

Figure 2-7 Level-sensitive Release Mode

Note 1: Even if the $\overline{\text{STOP}}$ pin input is low after warm-up start, the STOP mode is not restarted.

Note 2: In this case of changing to the level-sensitive mode from the edge-sensitive mode, the release mode is not switched until a rising edge of the $\overline{\text{STOP}}$ pin input is detected.

(2) Edge-sensitive release mode (RELM = “0”)

In this mode, STOP mode is released by a rising edge of the $\overline{\text{STOP}}$ pin input. This is used in applications where a relatively short program is executed repeatedly at periodic intervals. This periodic signal (for example, a clock from a low-power consumption oscillator) is input to the $\overline{\text{STOP}}$ pin. In the edge-sensitive release mode, STOP mode is started even when the $\overline{\text{STOP}}$ pin input is high level. Do not use any STOP5 to STOP2 pin inputs for releasing STOP mode in edge-sensitive release mode.

Example :Starting STOP mode from NORMAL mode

```
          DI                          ; IMF ← 0
          LD      (SYSCR1), 10010000B ; Starts after specified to the edge-sensitive release mode
```

Not Recommended for New Design

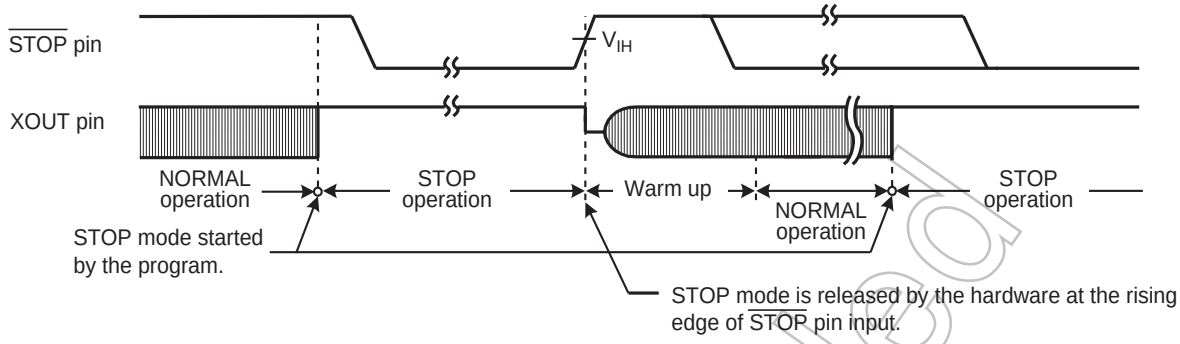

Figure 2-8 Edge-sensitive Release Mode

STOP mode is released by the following sequence.

1. In the dual-clock mode, when returning to NORMAL2, both the high-frequency and low-frequency clock oscillators are turned on; when returning to SLOW1 mode, only the low-frequency clock oscillator is turned on. In the single-clock mode, only the high-frequency clock oscillator is turned on.
2. A warm-up period is inserted to allow oscillation time to stabilize. During warm up, all internal operations remain halted. Four different warm-up times can be selected with the SYSCR1<WUT> in accordance with the resonator characteristics.
3. When the warm-up time has elapsed, normal operation resumes with the instruction following the STOP mode start instruction.

Note 1: When the STOP mode is released, the start is made after the prescaler and the divider of the timing generator are cleared to "0".

Note 2: STOP mode can also be released by inputting low level on the $\overline{\text{RESET}}$ pin, which immediately performs the normal reset operation.

Note 3: When STOP mode is released with a low hold voltage, the following cautions must be observed. The power supply voltage must be at the operating voltage level before releasing STOP mode. The $\overline{\text{RESET}}$ pin input must also be “H” level, rising together with the power supply voltage. In this case, if an external time constant circuit has been connected, the $\overline{\text{RESET}}$ pin input voltage will increase at a slower pace than the power supply voltage. At this time, there is a danger that a reset may occur if input voltage level of the $\overline{\text{RESET}}$ pin drops below the non-inverting high-level input voltage (Hysteresis input).

Table 2-2 Warm-up Time Example (at fc = 16.0 MHz, fs = 32.768 kHz)

WUT	Warm-up Time [ms]	
	Return to NORMAL Mode	Return to SLOW Mode
00	12.288	750
01	4.096	250
10	3.072	5.85
11	1.024	1.95

Note 1: The warm-up time is obtained by dividing the basic clock by the divider. Therefore, the warm-up time may include a certain amount of error if there is any fluctuation of the oscillation frequency when STOP mode is released. Thus, the warm-up time must be considered as an approximate value.

Not Recommended for New Design

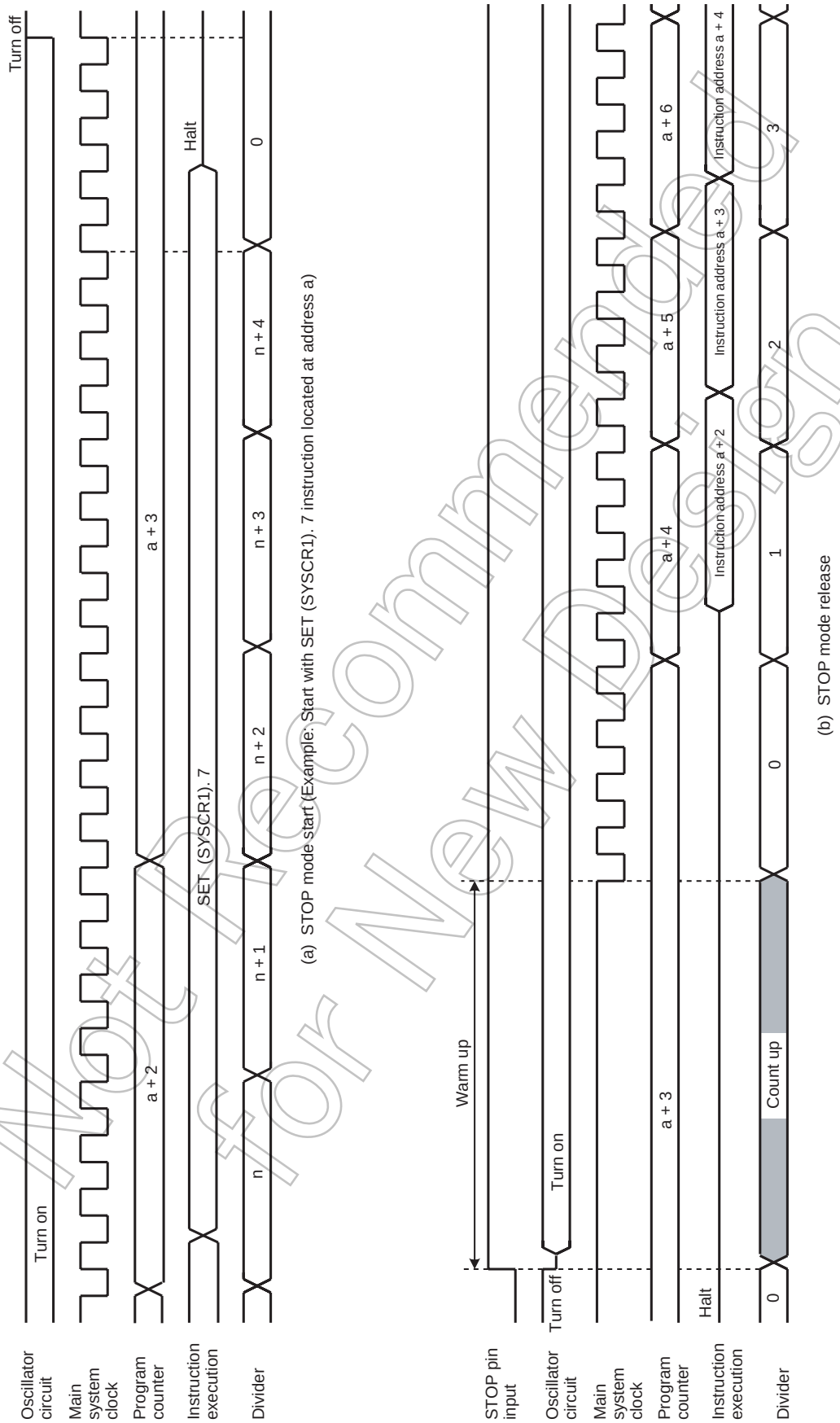

Figure 2-9 STOP Mode Start/Release

Not Recommended for New Design

2.2.4.2 IDLE1/2 mode and SLEEP1/2 mode

IDLE1/2 and SLEEP1/2 modes are controlled by the system control register 2 (SYSCR2) and maskable interrupts. The following status is maintained during these modes.

1. Operation of the CPU and watchdog timer (WDT) is halted. On-chip peripherals continue to operate.
2. The data memory, CPU registers, program status word and port output latches are all held in the status in effect before these modes were entered.
3. The program counter holds the address 2 ahead of the instruction which starts these modes.

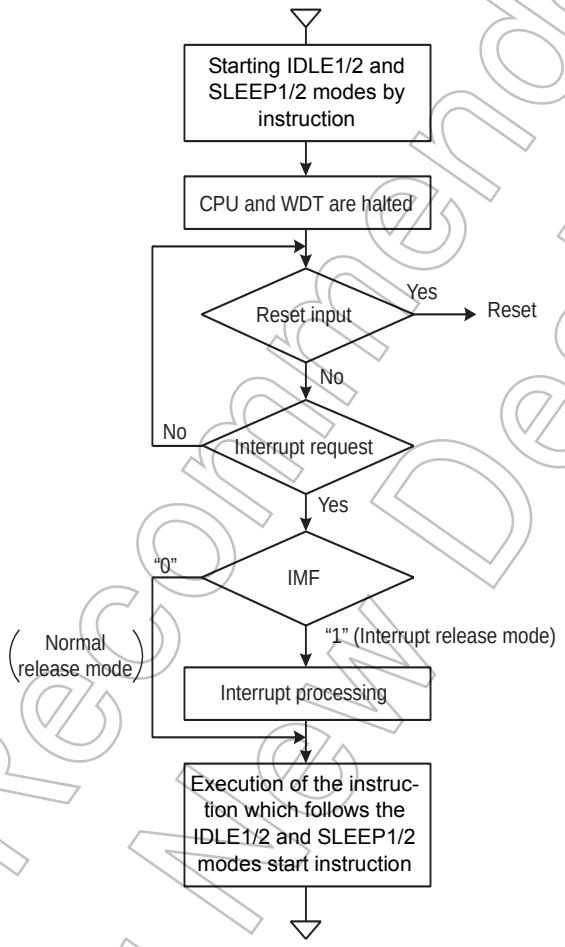

Figure 2-10 IDLE1/2 and SLEEP1/2 Modes

Not Recommended for New Design

- Start the IDLE1/2 and SLEEP1/2 modes

  After IMF is set to "0", set the individual interrupt enable flag (EF) which releases IDLE1/2 and SLEEP1/2 modes. To start IDLE1/2 and SLEEP1/2 modes, set SYSCR2<IDLE> to “1”.

- Release the IDLE1/2 and SLEEP1/2 modes

  IDLE1/2 and SLEEP1/2 modes include a normal release mode and an interrupt release mode. These modes are selected by interrupt master enable flag (IMF). After releasing IDLE1/2 and SLEEP1/2 modes, the SYSCR2<IDLE> is automatically cleared to “0” and the operation mode is returned to the mode preceding IDLE1/2 and SLEEP1/2 modes.

  IDLE1/2 and SLEEP1/2 modes can also be released by inputting low level on the $\overline{\text{RESET}}$ pin. After releasing reset, the operation mode is started from NORMAL1 mode.

(1) Normal release mode (IMF = “0”)

IDLE1/2 and SLEEP1/2 modes are released by any interrupt source enabled by the individual interrupt enable flag (EF). After the interrupt is generated, the program operation is resumed from the instruction following the IDLE1/2 and SLEEP1/2 modes start instruction. Normally, the interrupt latches (IL) of the interrupt source used for releasing must be cleared to “0” by load instructions.

(2) Interrupt release mode (IMF = “1”)

IDLE1/2 and SLEEP1/2 modes are released by any interrupt source enabled with the individual interrupt enable flag (EF) and the interrupt processing is started. After the interrupt is processed, the program operation is resumed from the instruction following the instruction, which starts IDLE1/2 and SLEEP1/2 modes.

Note: When a watchdog timer interrupts is generated immediately before IDLE1/2 and SLEEP1/2 modes are started, the watchdog timer interrupt will be processed but IDLE1/2 and SLEEP1/2 modes will not be started.

Not Recommended for New Design

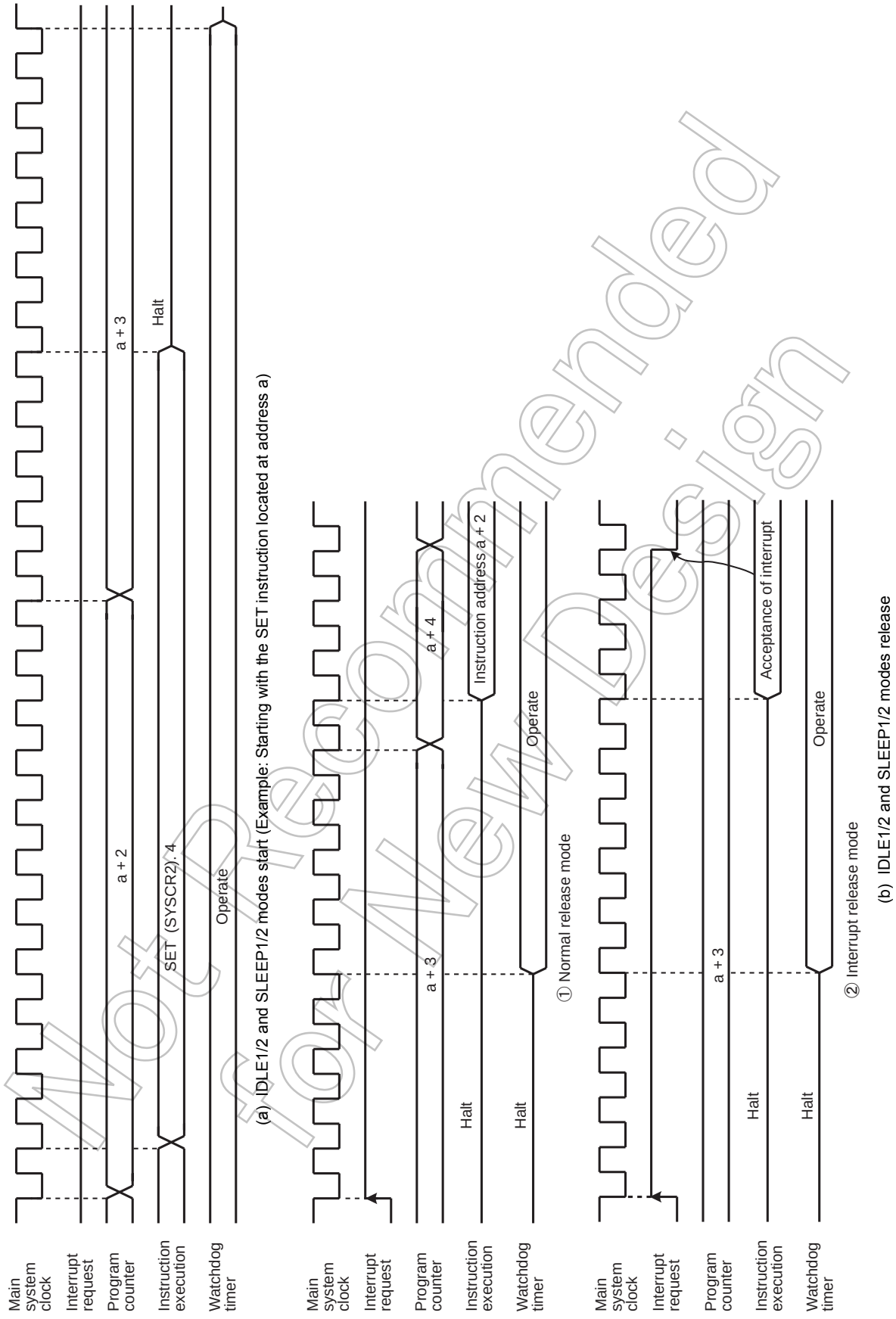

Figure 2-11 IDLE1/2 and SLEEP1/2 Modes Start/Release

Not Recommended for New Design

2.2.4.3 IDLE0 and SLEEP0 modes (IDLE0, SLEEP0)

IDLE0 and SLEEP0 modes are controlled by the system control register 2 (SYSCR2) and the time base timer control register (TBTCR). The following status is maintained during IDLE0 and SLEEP0 modes.

1. Timing generator stops feeding clock to peripherals except TBT.
2. The data memory, CPU registers, program status word and port output latches are all held in the status in effect before IDLE0 and SLEEP0 modes were entered.
3. The program counter holds the address 2 ahead of the instruction which starts IDLE0 and SLEEP0 modes.

Note: Before starting IDLE0 or SLEEP0 mode, be sure to stop (Disable) peripherals.

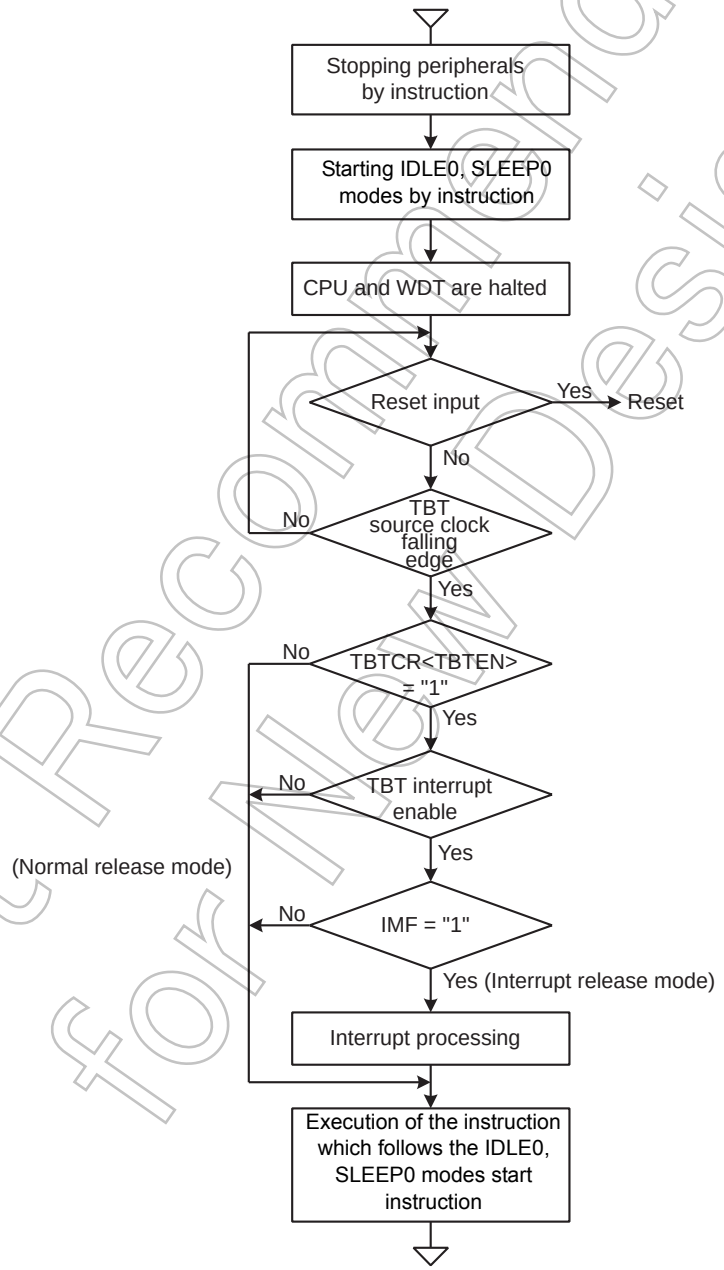

Figure 2-12 IDLE0 and SLEEP0 Modes

Not Recommended for New Design

- Start the IDLE0 and SLEEP0 modes

  Stop (Disable) peripherals such as a timer counter.

  To start IDLE0 and SLEEP0 modes, set SYSCR2<TGHALT> to “1”.

- Release the IDLE0 and SLEEP0 modes

  IDLE0 and SLEEP0 modes include a normal release mode and an interrupt release mode.

  These modes are selected by interrupt master flag (IMF), the individual interrupt enable flag of TBT and TBTCR<TBTEN>.

  After releasing IDLE0 and SLEEP0 modes, the SYSCR2<TGHALT> is automatically cleared to “0” and the operation mode is returned to the mode preceding IDLE0 and SLEEP0 modes. Before starting the IDLE0 or SLEEP0 mode, when the TBTCR<TBTEN> is set to “1”, INTTBT interrupt latch is set to “1”.

  IDLE0 and SLEEP0 modes can also be released by inputting low level on the $\overline{\text{RESET}}$ pin. After releasing reset, the operation mode is started from NORMAL1 mode.

Note: IDLE0 and SLEEP0 modes start/release without reference to TBTCR<TBTEN> setting.

(1) Normal release mode (IMF•EF6•TBTCR<TBTEN> = “0”)

IDLE0 and SLEEP0 modes are released by the source clock falling edge, which is setting by the TBTCR<TBTCK>. After the falling edge is detected, the program operation is resumed from the instruction following the IDLE0 and SLEEP0 modes start instruction. Before starting the IDLE0 or SLEEP0 mode, when the TBTCR<TBTEN> is set to “1”, INTTBT interrupt latch is set to “1”.

(2) Interrupt release mode (IMF•EF6•TBTCR<TBTEN> = “1”)

IDLE0 and SLEEP0 modes are released by the source clock falling edge, which is setting by the TBTCR<TBTCK> and INTTBT interrupt processing is started.

Note 1: Because returning from IDLE0, SLEEP0 to NORMAL1, SLOW1 is executed by the asynchronous internal clock, the period of IDLE0, SLEEP0 mode might be the shorter than the period setting by TBTCR<TBTCK>.

Note 2: When a watchdog timer interrupt is generated immediately before IDLE0/SLEEP0 mode is started, the watchdog timer interrupt will be processed but IDLE0/SLEEP0 mode will not be started.

Not Recommended for New Design

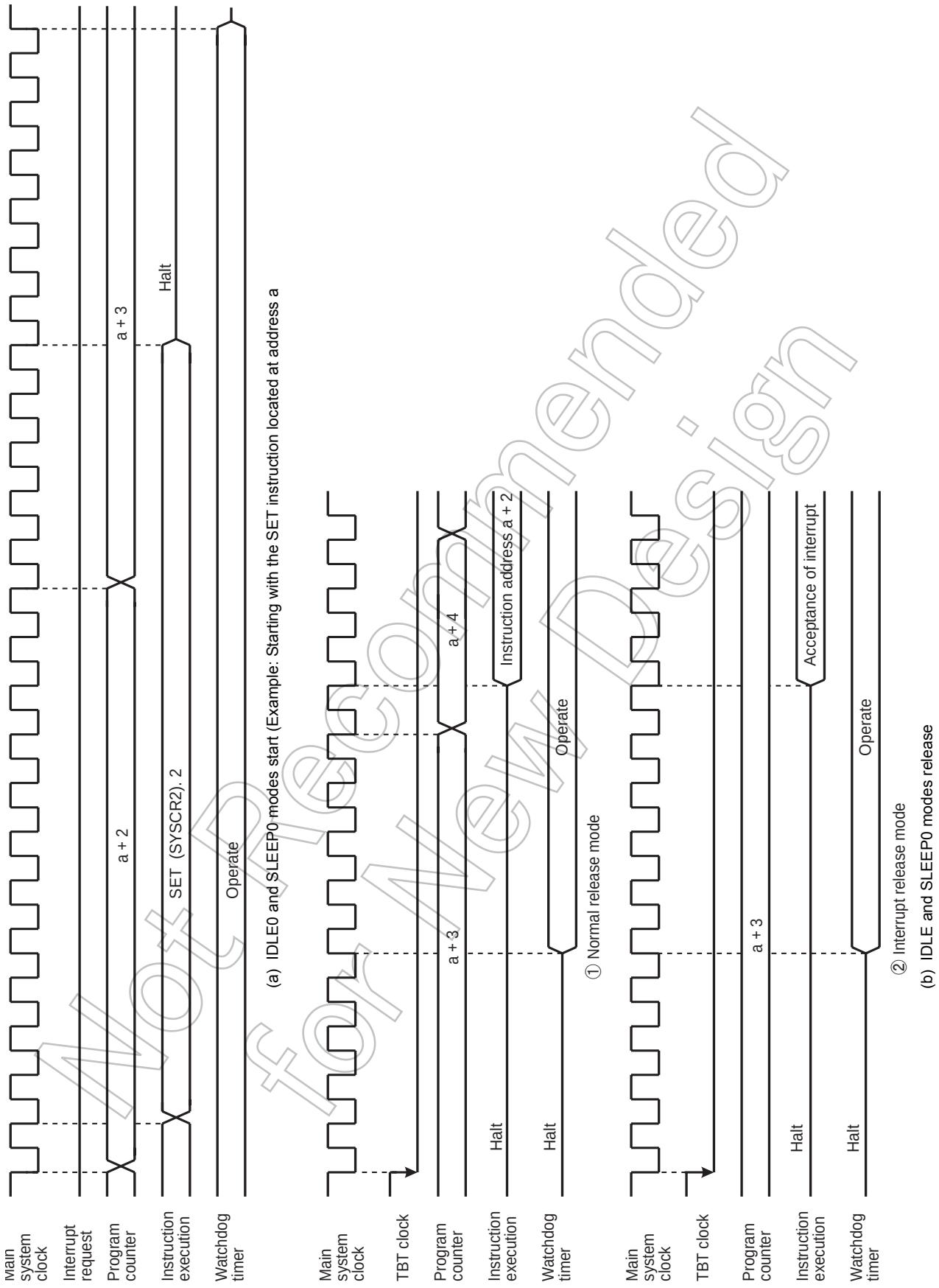

Figure 2-13 IDLE0 and SLEEP0 Modes Start/Release

Not Recommended for New Design

2.2.4.4 SLOW mode

SLOW mode is controlled by the system control register 2 (SYSCR2).

The following is the methods to switch the mode with the warm-up counter.

(1) Switching from NORMAL2 mode to SLOW1 mode

First, set SYSCR2<SYSCK> to switch the main system clock to the low-frequency clock for SLOW2 mode. Next, clear SYSCR2<XEN> to turn off high-frequency oscillation.

Note: The high-frequency clock can be continued oscillation in order to return to NORMAL2 mode from SLOW mode quickly. Always turn off oscillation of high-frequency clock when switching from SLOW mode to stop mode.

Example 1 :Switching from NORMAL2 mode to SLOW1 mode.

```
        SET     (SYSCR2). 5     ; SYSCR2<SYSCK> ← 1
                                  (Switches the main system clock to the low-frequency
                                  clock for SLOW2)

        CLR     (SYSCR2). 7     ; SYSCR2<XEN> ← 0
                                  (Turns off high-frequency oscillation)
```

Example 2 :Switching to the SLOW1 mode after low-frequency clock has stabilized.

```
        SET     (SYSCR2). 6     ; SYSCR2<XTEN> ← 1

        LD      (TC3CR), 43H    ; Sets mode for TC4, 3 (16-bit mode, fs for source)

        LD      (TC4CR), 05H    ; Sets warming-up counter mode

        LDW     (TTREG3), 8000H ; Sets warm-up time (Depend on oscillator accompanied)

        DI                      ; IMF ← 0

        SET     (EIRH). 3       ; Enables INTTC4

        EI                      ; IMF ← 1

        SET     (TC4CR). 3      ; Starts TC4, 3

        :

PINTTC4: CLR    (TC4CR). 3      ; Stops TC4, 3

        SET     (SYSCR2). 5     ; SYSCR2<SYSCK> ← 1
                                  (Switches the main system clock to the low-frequency clock)

        CLR     (SYSCR2). 7     ; SYSCR2<XEN> ← 0
                                  (Turns off high-frequency oscillation)

        RETI

        :

VINTTC4: DW     PINTTC4         ; INTTC4 vector table
```

Not Recommended for New Design

(2) Switching from SLOW1 mode to NORMAL2 mode

First, set SYSCR2<XEN> to turn on the high-frequency oscillation. When time for stabilization (Warm up) has been taken by the timer/counter (TC4,TC3), clear SYSCR2<SYSCK> to switch the main system clock to the high-frequency clock.
SLOW mode can also be released by inputting low level on the $\overline{\text{RESET}}$ pin. After releasing reset, the operation mode is started from NORMAL1 mode.

Note: After SYSCK is cleared to "0", executing the instructions is continiued by the low-frequency clock for the period synchronized with low-frequency and high-frequency clocks.

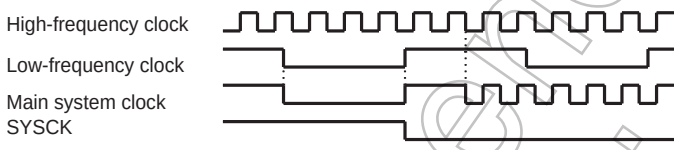

Example :Switching from the SLOW1 mode to the NORMAL2 mode (fc = 16 MHz, warm-up time is 4.0 ms).

```
            SET     (SYSCR2). 7      ; SYSCR2<XEN> ← 1 (Starts high-frequency oscillation)
            LD      (TC3CR), 63H     ; Sets mode for TC4, 3 (16-bit mode, fc for source)
            LD      (TC4CR), 05H     ; Sets warming-up counter mode
            LD      (TTREG4), 0F8H   ; Sets warm-up time
            DI                       ; IMF ← 0
            SET     (EIRH). 3        ; Enables INTTC4
            EI                       ; IMF ← 1
            SET     (TC4CR). 3       ; Starts TC4, 3
             :
PINTTC4:    CLR     (TC4CR). 3       ; Stops TC4, 3
            CLR     (SYSCR2). 5      ; SYSCR2<SYSCK> ← 0
                                       (Switches the main system clock to the high-frequency clock)
            RETI
             :
VINTTC4:    DW      PINTTC4          ; INTTC4 vector table
```

Not Recommended for New Design

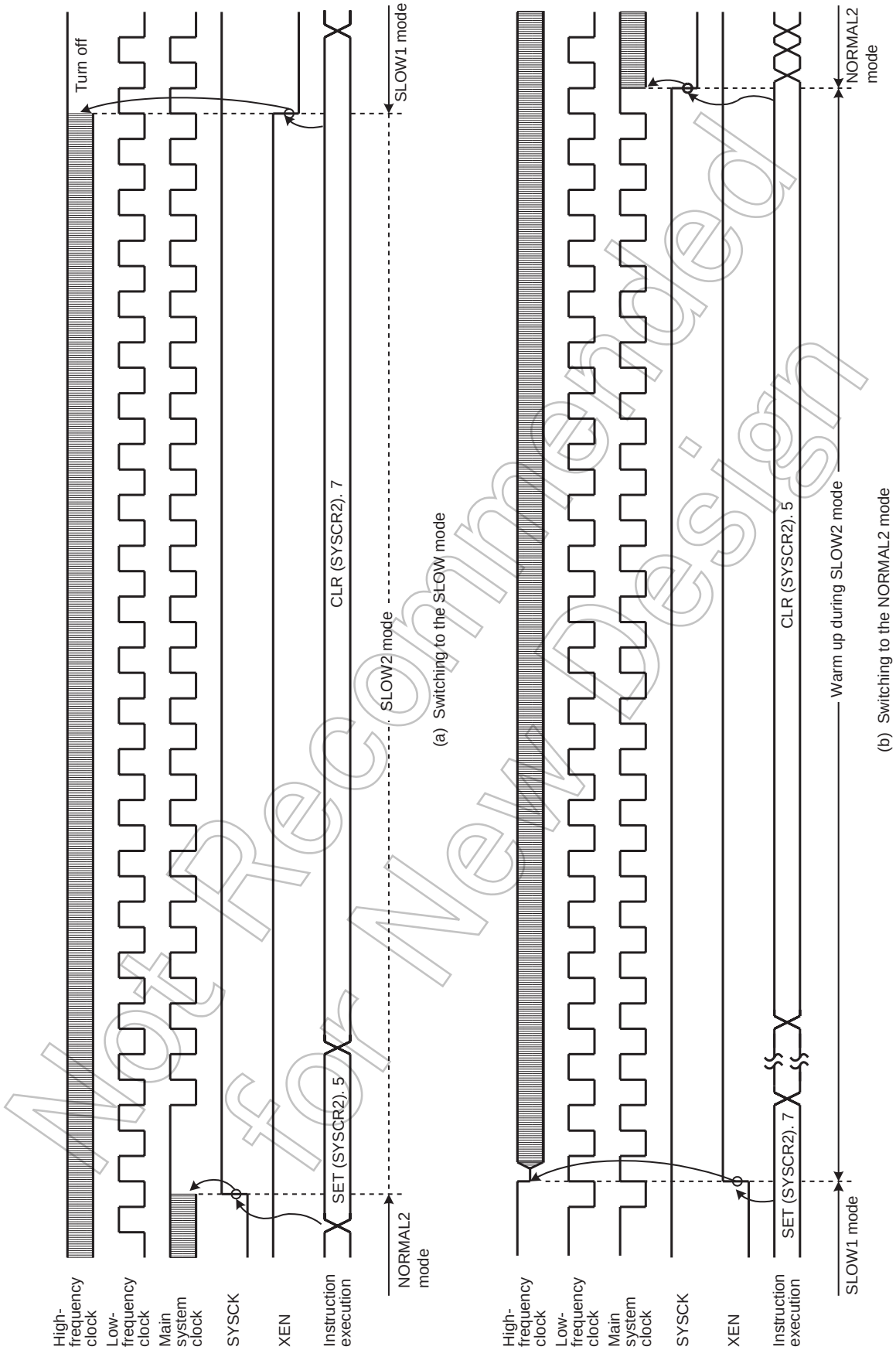

Figure 2-14 Switching between the NORMAL2 and SLOW Modes

Not Recommended for New Design

2.3 Reset Circuit

The TMP86P807NG has four types of reset generation procedures: An external reset input, an address trap reset, a watchdog timer reset and a system clock reset. Of these reset, the address trap reset, the watchdog timer and the system clock reset are a malfunction reset. When the malfunction reset request is detected, reset occurs during the maximum 24/fc[s].

The malfunction reset circuit such as watchdog timer reset, address trap reset and system clock reset is not initialized when power is turned on. Therefore, reset may occur during maximum 24/fc[s] (1.5μs at 16.0 MHz) when power is turned on.

Table 2-3 shows on-chip hardware initialization by reset action.

Table 2-3 Initializing Internal Status by Reset Action

On-chip Hardware	Initial Value	On-chip Hardware	Initial Value
Program counter (PC)	(FFFEH)	Prescaler and divider of timing generator	0
Stack pointer (SP)	Not initialized		
General-purpose registers (W, A, B, C, D, E, H, L, IX, IY)	Not initialized		
Jump status flag (JF)	Not initialized	Watchdog timer	Enable
Zero flag (ZF)	Not initialized	Output latches of I/O ports	Refer to I/O port circuitry
Carry flag (CF)	Not initialized		
Half carry flag (HF)	Not initialized		
Sign flag (SF)	Not initialized		
Overflow flag (VF)	Not initialized		
Interrupt master enable flag (IMF)	0		
Interrupt individual enable flags (EF)	0	Control registers	Refer to each of control register
Interrupt latches (IL)	0		
		RAM	Not initialized

2.3.1 External Reset Input

The $\overline{\text{RESET}}$ pin contains a Schmitt trigger (Hysteresis) with an internal pull-up resistor.

When the $\overline{\text{RESET}}$ pin is held at "L" level for at least 3 machine cycles (12/fc [s]) with the power supply voltage within the operating voltage range and oscillation stable, a reset is applied and the internal state is initialized.

When the $\overline{\text{RESET}}$ pin input goes high, the reset operation is released and the program execution starts at the vector address stored at addresses FFFEH to FFFFH.

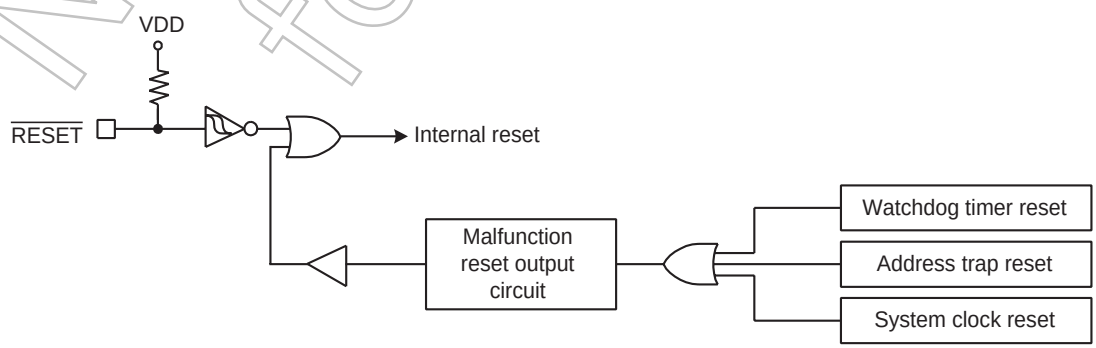

Figure 2-15 Reset Circuit

Not Recommended for New Design

2.3.2 Address trap reset

If the CPU should start looping for some cause such as noise and an attempt be made to fetch an instruction from the on-chip RAM (when WDTCR1<ATAS> is set to "1") or SFR area, address trap reset will be generated. The reset time is maximum 24/fc[s] (1.5μs at 16.0 MHz).

Note: The operating mode under address trapped is alternative of reset or interrupt. The address trap area is alternative.

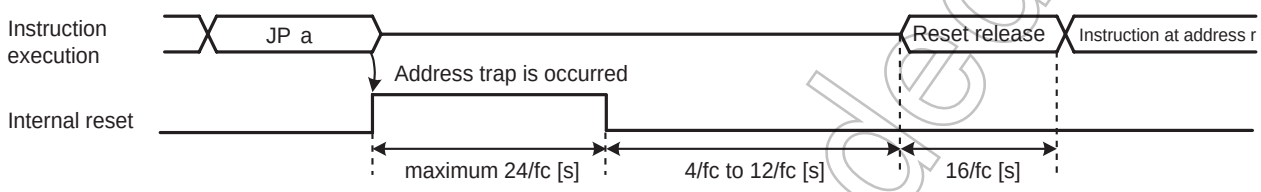

Note 1: Address "a" is on-chip RAM (WDTCR1<ATAS> = "1") space or SFR area.
Note 2: During reset release, reset vector "r" is read out, and an instruction at address "r" is fetched and decoded.

Figure 2-16 Address Trap Reset

2.3.3 Watchdog timer reset

Refer to Section "Watchdog Timer".

2.3.4 System clock reset

If the condition as follows is detected, the system clock reset occurs automatically to prevent dead lock of the CPU. (The oscillation is continued without stopping.)

- In case of clearing SYSCR2<XEN> and SYSCR2<XTEN> simultaneously to "0".
- In case of clearing SYSCR2<XEN> to "0", when the SYSCR2<SYSCK> is "0".
- In case of clearing SYSCR2<XTEN> to "0", when the SYSCR2<SYSCK> is "1".

The reset time is maximum 24/fc (1.5 μs at 16.0 MHz).

Not Recommended for New Design

Not Recommended for New Design

Not Recommended for New Design

3. Interrupt Control Circuit

The TMP86P807NG has a total of 17 interrupt sources excluding reset, of which 1 source levels are multiplexed. Interrupts can be nested with priorities. Four of the internal interrupt sources are non-maskable while the rest are maskable.

Interrupt sources are provided with interrupt latches (IL), which hold interrupt requests, and independent vectors. The interrupt latch is set to “1” by the generation of its interrupt request which requests the CPU to accept its interrupts. Interrupts are enabled or disabled by software using the interrupt master enable flag (IMF) and interrupt enable flag (EF). If more than one interrupts are generated simultaneously, interrupts are accepted in order which is dominated by hardware. However, there are no prioritized interrupt factors among non-maskable interrupts.

Interrupt Factors		Enable Condition	Interrupt Latch	Vector Address	Priority
Internal/External	(Reset)	Non-maskable	–	FFFE	1
Internal	INTSWI (Software interrupt)	Non-maskable	–	FFFC	2
Internal	INTUNDEF (Executed the undefined instruction interrupt)	Non-maskable	–	FFFC	2
Internal	INTATRAP (Address trap interrupt)	Non-maskable	IL2	FFFA	2
Internal	INTWDT (Watchdog timer interrupt)	Non-maskable	IL3	FFF8	2
External	$\overline{\text{INT0}}$	IMF• EF4 = 1, INT0EN = 1	IL4	FFF6	5
External	INT1	IMF• EF5 = 1	IL5	FFF4	6
Internal	INTTBT	IMF• EF6 = 1	IL6	FFF2	7
Internal	INTTC1	IMF• EF7 = 1	IL7	FFF0	8
Internal	INTRXD	IMF• EF8 = 1	IL8	FFEE	9
Internal	INTTXD	IMF• EF9 = 1	IL9	FFEC	10
Internal	INTTC3	IMF• EF10 = 1	IL10	FFEA	11
Internal	INTTC4	IMF• EF11 = 1, IL11ER = 0	IL11	FFE8	12
External	INT3	IMF• EF11 = 1, IL11ER = 1			
Internal	INTADC	IMF• EF12 = 1	IL12	FFE6	13
Internal	INTSEI1	IMF• EF13 = 1	IL13	FFE4	14
External	INT4	IMF• EF14 = 1	IL14	FFE2	15
External	$\overline{\text{INT5}}$	IMF• EF15 = 1	IL15	FFE0	16

Note 1: The INTSEL register is used to select the interrupt source to be enabled for each multiplexed source level (see 3.3 Interrupt Source Selector (INTSEL)).

Note 2: To use the address trap interrupt (INTATRAP), clear WDTCR1<ATOUT> to “0” (It is set for the “reset request” after reset is cancelled). For details, see “Address Trap”.

Note 3: To use the watchdog timer interrupt (INTWDT), clear WDTCR1<WDTOUT> to "0" (It is set for the "Reset request" after reset is released). For details, see "Watchdog Timer".

3.1 Interrupt latches (IL15 to IL2)

An interrupt latch is provided for each interrupt source, except for a software interrupt and an executed the undefined instruction interrupt. When interrupt request is generated, the latch is set to “1”, and the CPU is requested to accept the interrupt if its interrupt is enabled. The interrupt latch is cleared to "0" immediately after accepting interrupt. All interrupt latches are initialized to “0” during reset.

The interrupt latches are located on address 003CH and 003DH in SFR area. Each latch can be cleared to "0" individually by instruction. However, IL2 and IL3 should not be cleared to "0" by software. For clearing the interrupt latch, load instruction should be used and then IL2 and IL3 should be set to "1". If the read-modify-write instructions such as bit manipulation or operation instructions are used, interrupt request would be cleared inadequately if interrupt is requested while such instructions are executed.

Interrupt latches are not set to “1” by an instruction.

Since interrupt latches can be read, the status for interrupt requests can be monitored by software.

Not Recommended for New Design

Note: In main program, before manipulating the interrupt enable flag (EF) or the interrupt latch (IL), be sure to clear IMF to "0" (Disable interrupt by DI instruction). Then set IMF newly again as required after operating on the EF or IL (Enable interrupt by EI instruction)
In interrupt service routine, because the IMF becomes "0" automatically, clearing IMF need not execute normally on interrupt service routine. However, if using multiple interrupt on interrupt service routine, manipulating EF or IL should be executed before setting IMF="1".

Example 1 :Clears interrupt latches

```
DI                                  ; IMF ← 0
LDW     (ILL), 1110100000111111B    ; IL12, IL10 to IL6 ← 0
EI                                  ; IMF ← 1
```

Example 2 :Reads interrupt latchess

```
LD      WA, (ILL)                   ; W ← ILH, A ← ILL
```

Example 3 :Tests interrupt latches

```
TEST    (ILL). 7                    ; if IL7 = 1 then jump
JR      F, SSET
```

3.2 Interrupt enable register (EIR)

The interrupt enable register (EIR) enables and disables the acceptance of interrupts, except for the non-maskable interrupts (Software interrupt, undefined instruction interrupt, address trap interrupt and watchdog interrupt). Non-maskable interrupt is accepted regardless of the contents of the EIR.

The EIR consists of an interrupt master enable flag (IMF) and the individual interrupt enable flags (EF). These registers are located on address 003AH and 003BH in SFR area, and they can be read and written by an instructions (Including read-modify-write instructions such as bit manipulation or operation instructions).

3.2.1 Interrupt master enable flag (IMF)

The interrupt enable register (IMF) enables and disables the acceptance of the whole maskable interrupt. While IMF = “0”, all maskable interrupts are not accepted regardless of the status on each individual interrupt enable flag (EF). By setting IMF to “1”, the interrupt becomes acceptable if the individuals are enabled. When an interrupt is accepted, IMF is cleared to “0” after the latest status on IMF is stacked. Thus the maskable interrupts which follow are disabled. By executing return interrupt instruction [RETI/RETN], the stacked data, which was the status before interrupt acceptance, is loaded on IMF again.

The IMF is located on bit0 in EIRL (Address: 003AH in SFR), and can be read and written by an instruction. The IMF is normally set and cleared by [EI] and [DI] instruction respectively. During reset, the IMF is initialized to “0”.

3.2.2 Individual interrupt enable flags (EF15 to EF4)

Each of these flags enables and disables the acceptance of its maskable interrupt. Setting the corresponding bit of an individual interrupt enable flag to “1” enables acceptance of its interrupt, and setting the bit to “0” disables acceptance. During reset, all the individual interrupt enable flags (EF15 to EF4) are initialized to “0” and all maskable interrupts are not accepted until they are set to “1”.

Note: In main program, before manipulating the interrupt enable flag (EF) or the interrupt latch (IL), be sure to clear IMF to "0" (Disable interrupt by DI instruction). Then set IMF newly again as required after operating on the EF or IL (Enable interrupt by EI instruction)
In interrupt service routine, because the IMF becomes "0" automatically, clearing IMF need not execute normally on interrupt service routine. However, if using multiple interrupt on interrupt service routine, manipulating EF or IL should be executed before setting IMF="1".

Not Recommended for New Design

Example 1 :Enables interrupts individually and sets IMF

```
DI                                          ; IMF ← 0

LDW        (EIRL), 1110100010100000B        ; EF15 to EF13, EF11, EF7, EF5 ← 1
  :                                           Note: IMF should not be set.

  :

EI                                          ; IMF ← 1
```

Example 2 :C compiler description example

```
unsigned  int  _io (3AH)  EIRL;             /* 3AH shows EIRL address */

_DI();

EIRL = 10100000B;

  :

_EI();
```

Not Recommended for New Design

Interrupt Latches

(Initial value: 00000000 000000**)

ILH,ILL (003DH, 003CH)	15	14	13	12	11	10	9	8	7	6	5	4	3	2	1	0
	IL15	IL14	IL13	IL12	IL11	IL10	IL9	IL8	IL7	IL6	IL5	IL4	IL3	IL2		
	ILH (003DH)								ILL (003CH)							

		at RD	at WR	
IL15 to IL2	Interrupt latches	0: No interrupt request 1: Interrupt request	0: Clears the interrupt request 1: (Interrupt latch is not set.)	R/W

Note 1: To clear any one of bits IL7 to IL4, be sure to write "1" into IL2 and IL3.

Note 2: In main program, before manipulating the interrupt enable flag (EF) or the interrupt latch (IL), be sure to clear IMF to "0" (Disable interrupt by DI instruction). Then set IMF newly again as required after operating on the EF or IL (Enable interrupt by EI instruction)
In interrupt service routine, because the IMF becomes "0" automatically, clearing IMF need not execute normally on interrupt service routine. However, if using multiple interrupt on interrupt service routine, manipulating EF or IL should be executed before setting IMF="1".

Note 3: Do not clear IL with read-modify-write instructions such as bit operations.

Interrupt Enable Registers

(Initial value: 00000000 0000***0)

EIRH,EIRL (003BH, 003AH)	15	14	13	12	11	10	9	8	7	6	5	4	3	2	1	0
	EF15	EF14	EF13	EF12	EF11	EF10	EF9	EF8	EF7	EF6	EF5	EF4				IMF
	EIRH (003BH)								EIRL (003AH)							

EF15 to EF4	Individual-interrupt enable flag (Specified for each bit)	0: Disables the acceptance of each maskable interrupt. 1: Enables the acceptance of each maskable interrupt.	R/W
IMF	Interrupt master enable flag	0: Disables the acceptance of all maskable interrupts 1: Enables the acceptance of all maskable interrupts	

Note 1: *: Don’t care

Note 2: Do not set IMF and the interrupt enable flag (EF15 to EF4) to “1” at the same time.

Note 3: In main program, before manipulating the interrupt enable flag (EF) or the interrupt latch (IL), be sure to clear IMF to "0" (Disable interrupt by DI instruction). Then set IMF newly again as required after operating on the EF or IL (Enable interrupt by EI instruction)
In interrupt service routine, because the IMF becomes "0" automatically, clearing IMF need not execute normally on interrupt service routine. However, if using multiple interrupt on interrupt service routine, manipulating EF or IL should be executed before setting IMF="1".

Not Recommended for New Design

3.3 Interrupt Source Selector (INTSEL)

Each interrupt source that shares the interrupt source level with another interrupt source is allowed to enable the interrupt latch only when it is selected in the INTSEL register. The interrupt controller does not hold interrupt requests corresponding to interrupt sources that are not selected in the INTSEL register. Therefore, the INTSEL register must be set appropriately before interrupt requests are generated.

The following interrupt sources share their interrupt source level; the source is selected onnthe register INTSEL.

1. INTTC4 and INT3 share the interrupt source level whose priority is 12.

Interrupt source selector

INTSEL (003EH)	7	6	5	4	3	2	1	0	
	-	-	-	IL11ER	-	-	-	-	(Initial value: ***0 ****)

IL11ER	Selects INTTC4 or INT3	0: INTTC4 1: INT3	R/W

Note: Always set "0" to bit 5 of INTSEL register.

3.4 Interrupt Sequence

An interrupt request, which raised interrupt latch, is held, until interrupt is accepted or interrupt latch is cleared to “0” by resetting or an instruction. Interrupt acceptance sequence requires 8 machine cycles (2 μs @16 MHz) after the completion of the current instruction. The interrupt service task terminates upon execution of an interrupt return instruction [RETI] (for maskable interrupts) or [RETN] (for non-maskable interrupts). Figure 3-1 shows the timing chart of interrupt acceptance processing.

3.4.1 Interrupt acceptance processing is packaged as follows.

a. The interrupt master enable flag (IMF) is cleared to “0” in order to disable the acceptance of any following interrupt.
b. The interrupt latch (IL) for the interrupt source accepted is cleared to “0”.
c. The contents of the program counter (PC) and the program status word, including the interrupt master enable flag (IMF), are saved (Pushed) on the stack in sequence of PSW + IMF, PCH, PCL. Meanwhile, the stack pointer (SP) is decremented by 3.
d. The entry address (Interrupt vector) of the corresponding interrupt service program, loaded on the vector table, is transferred to the program counter.
e. The instruction stored at the entry address of the interrupt service program is executed.

Note: When the contents of PSW are saved on the stack, the contents of IMF are also saved.

Not Recommended for New Design

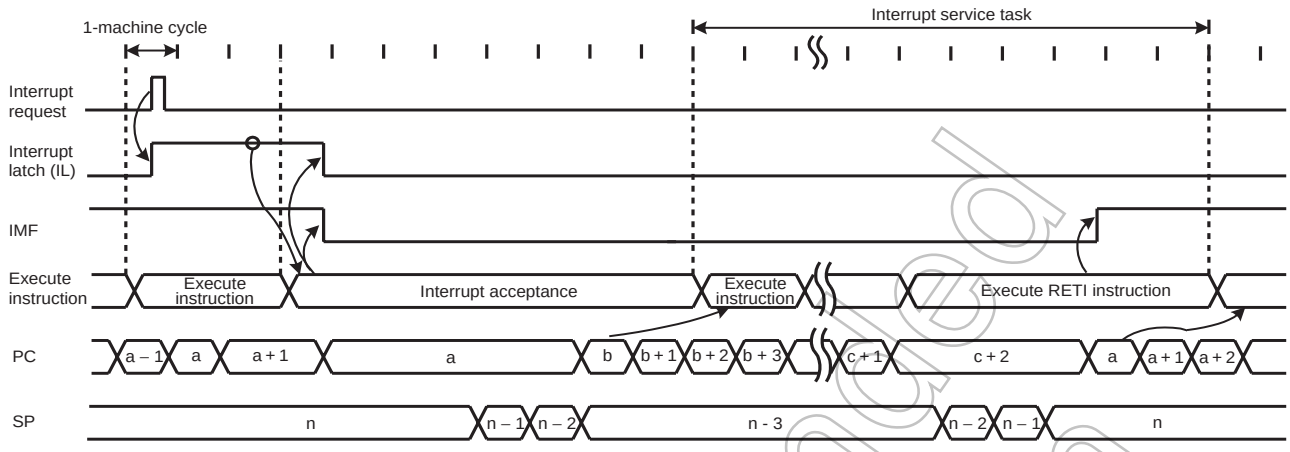

Note 1: a: Return address entry address, b: Entry address, c: Address which RETI instruction is stored

Note 2: On condition that interrupt is enabled, it takes 38/fc [s] or 38/fs [s] at maximum (If the interrupt latch is set at the first machine cycle on 10 cycle instruction) to start interrupt acceptance processing since its interrupt latch is set.

Figure 3-1 Timing Chart of Interrupt Acceptance/Return Interrupt Instruction

Example: Correspondence between vector table address for INTTBT and the entry address of the interrupt service program

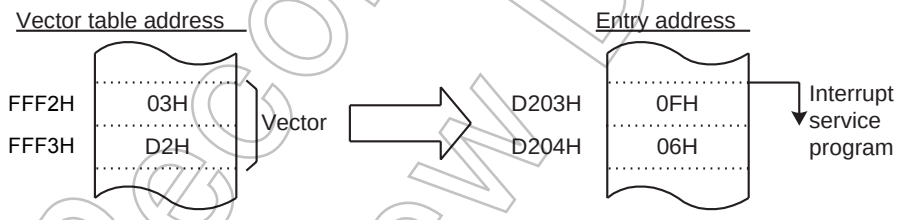

A maskable interrupt is not accepted until the IMF is set to “1” even if the maskable interrupt higher than the level of current servicing interrupt is requested.

In order to utilize nested interrupt service, the IMF is set to “1” in the interrupt service program. In this case, acceptable interrupt sources are selectively enabled by the individual interrupt enable flags.

To avoid overloaded nesting, clear the individual interrupt enable flag whose interrupt is currently serviced, before setting IMF to “1”. As for non-maskable interrupt, keep interrupt service shorten compared with length between interrupt requests; otherwise the status cannot be recovered as non-maskable interrupt would simply nested.

3.4.2 Saving/restoring general-purpose registers

During interrupt acceptance processing, the program counter (PC) and the program status word (PSW, includes IMF) are automatically saved on the stack, but the accumulator and others are not. These registers are saved by software if necessary. When multiple interrupt services are nested, it is also necessary to avoid using the same data memory area for saving registers. The following methods are used to save/restore the general-purpose registers.

3.4.2.1 Using PUSH and POP instructions

If only a specific register is saved or interrupts of the same source are nested, general-purpose registers can be saved/restored using the PUSH/POP instructions.

Not Recommended for New Design

Example :Save/store register using PUSH and POP instructions

```
PINTxx:     PUSH    WA          ; Save WA register
            (interrupt processing)
            POP     WA          ; Restore WA register
            RETI                ; RETURN
```

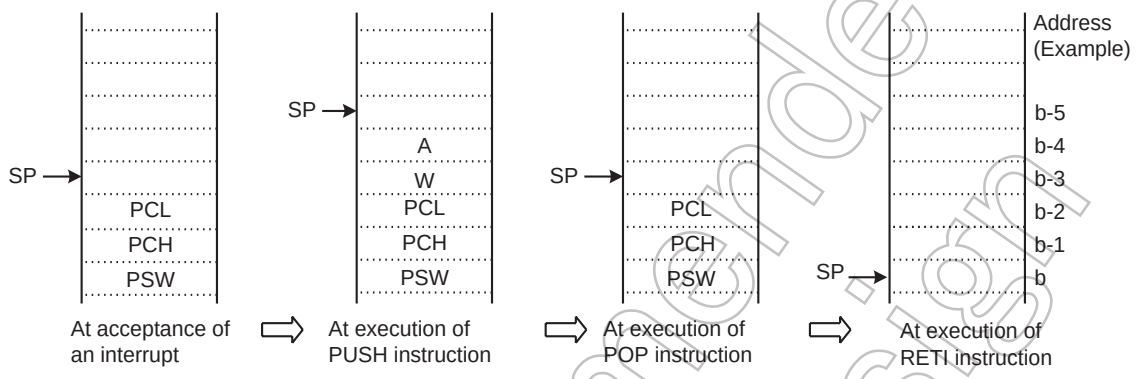

3.4.2.2 Using data transfer instructions

To save only a specific register without nested interrupts, data transfer instructions are available.

Example :Save/store register using data transfer instructions

```
PINTxx:     LD      (GSAVA), A  ; Save A register
            (interrupt processing)
            LD      A, (GSAVA)  ; Restore A register
            RETI                ; RETURN
```

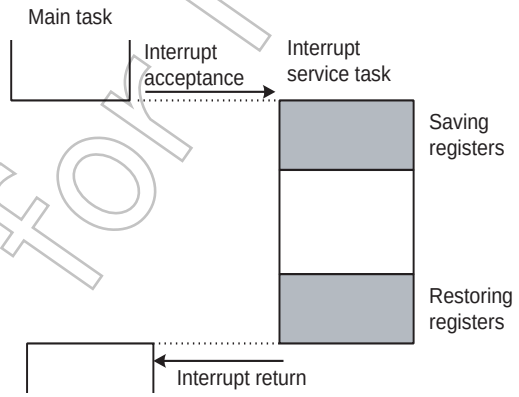

Saving/Restoring general-purpose registers using PUSH/POP data transfer instruction

Figure 3-2 Saving/Restoring General-purpose Registers under Interrupt Processing

Not Recommended for New Design

3.4.3 Interrupt return

Interrupt return instructions [RETI]/[RETN] perform as follows.

[RETI]/[RETN] Interrupt Return
1. Program counter (PC) and program status word (PSW, includes IMF) are restored from the stack. 2. Stack pointer (SP) is incremented by 3.

As for address trap interrupt (INTATRAP), it is required to alter stacked data for program counter (PC) to restarting address, during interrupt service program.

Note: If [RETN] is executed with the above data unaltered, the program returns to the address trap area and INTATRAP occurs again.When interrupt acceptance processing has completed, stacked data for PCL and PCH are located on address (SP + 1) and (SP + 2) respectively.

Example 1 :Returning from address trap interrupt (INTATRAP) service program

```
PINTxx:   POP     WA                  ; Recover SP by 2
          LD      WA, Return Address  ;
          PUSH    WA                  ; Alter stacked data
          (interrupt processing)
          RETN                        ; RETURN
```

Example 2 :Restarting without returning interrupt
(In this case, PSW (Includes IMF) before interrupt acceptance is discarded.)

```
PINTxx:   INC     SP                  ; Recover SP by 3
          INC     SP                  ;
          INC     SP                  ;
          (interrupt processing)
          LD      EIRL, data          ; Set IMF to "1" or clear it to "0"
          JP      Restart Address     ; Jump into restarting address
```

Interrupt requests are sampled during the final cycle of the instruction being executed. Thus, the next interrupt can be accepted immediately after the interrupt return instruction is executed.

Note 1: It is recommended that stack pointer be return to rate before INTATRAP (Increment 3 times), if return interrupt instruction [RETN] is not utilized during interrupt service program under INTATRAP (such as Example 2).

Note 2: When the interrupt processing time is longer than the interrupt request generation time, the interrupt service task is performed but not the main task.

3.5 Software Interrupt (INTSW)

Executing the SWI instruction generates a software interrupt and immediately starts interrupt processing (INTSW is highest prioritized interrupt).

Use the SWI instruction only for detection of the address error or for debugging.

3.5.1 Address error detection

FFH is read if for some cause such as noise the CPU attempts to fetch an instruction from a non-existent memory address during single chip mode. Code FFH is the SWI instruction, so a software interrupt is generated and an address error is detected. The address error detection range can be further expanded by writing FFH to unused areas of the program memory. Address trap reset is generated in case that an instruction is fetched from RAM or SFR areas.

Not Recommended for New Design

3.5.2 Debugging

Debugging efficiency can be increased by placing the SWI instruction at the software break point setting address.

3.6 Undefined Instruction Interrupt (INTUNDEF)

Taking code which is not defined as authorized instruction for instruction causes INTUNDEF. INTUNDEF is generated when the CPU fetches such a code and tries to execute it. INTUNDEF is accepted even if non-maskable interrupt is in process. Contemporary process is broken and INTUNDEF interrupt process starts, soon after it is requested.

Note: The undefined instruction interrupt (INTUNDEF) forces CPU to jump into vector address, as software interrupt (SWI) does.

3.7 Address Trap Interrupt (INTATRAP)

Fetching instruction from unauthorized area for instructions (Address trapped area) causes reset output or address trap interrupt (INTATRAP). INTATRAP is accepted even if non-maskable interrupt is in process. Contemporary process is broken and INTATRAP interrupt process starts, soon after it is requested.

Note: The operating mode under address trapped, whether to be reset output or interrupt processing, is selected on watchdog timer control register (WDTCR).

3.8 External Interrupts

The TMP86P807NG has 5 external interrupt inputs. These inputs are equipped with digital noise reject circuits (Pulse inputs of less than a certain time are eliminated as noise).

Edge selection is also possible with INT1,INT3,INT4. The $\overline{\text{INT0}}$/P10 pin can be configured as either an external interrupt input pin or an input/output port, and is configured as an input port during reset.

Edge selection, noise reject control and $\overline{\text{INT0}}$/P10 pin function selection are performed by the external interrupt control register (EINTCR).

Not Recommended for New Design

Source	Pin	Enable Conditions	Release Edge (level)	Digital Noise Reject
INT0	$\overline{\text{INT0}}$	IMF • EF4 • INT0EN=1	Falling edge	Pulses of less than 2/fc [s] are eliminated as noise. Pulses of 7/fc [s] or more are considered to be signals. In the SLOW or the SLEEP mode, pulses of less than 1/fs [s] are eliminated as noise. Pulses of 3.5/fs [s] or more are considered to be signals.
INT1	INT1	IMF • EF5 = 1	Falling edge or Rising edge	Pulses of less than 15/fc or 63/fc [s] are eliminated as noise. Pulses of 49/fc or 193/fc [s] or more are considered to be signals. In the SLOW or the SLEEP mode, pulses of less than 1/fs [s] are eliminated as noise. Pulses of 3.5/fs [s] or more are considered to be signals.
INT3	INT3	IMF • EF11 = 1 and IL11ER=1	Falling edge, Rising edge, Falling and Rising edge or H level	Pulses of less than 7/fc [s] are eliminated as noise. Pulses of 25/fc [s] or more are considered to be signals. In the SLOW or the SLEEP mode, pulses of less than 1/fs [s] are eliminated as noise. Pulses of 3.5/fs [s] or more are considered to be signals.
INT4	INT4	IMF • EF14 = 1	Falling edge, Rising edge, Falling and Rising edge or H level	Pulses of less than 7/fc [s] are eliminated as noise. Pulses of 25/fc [s] or more are considered to be signals. In the SLOW or the SLEEP mode, pulses of less than 1/fs [s] are eliminated as noise. Pulses of 3.5/fs [s] or more are considered to be signals.
INT5	$\overline{\text{INT5}}$	IMF • EF15 = 1	Falling edge	Pulses of less than 2/fc [s] are eliminated as noise. Pulses of 7/fc [s] or more are considered to be signals. In the SLOW or the SLEEP mode, pulses of less than 1/fs [s] are eliminated as noise. Pulses of 3.5/fs [s] or more are considered to be signals.

Note 1: In NORMAL1/2 or IDLE1/2 mode, if a signal with no noise is input on an external interrupt pin, it takes a maximum of "signal establishment time + 6/fs[s]" from the input signal's edge to set the interrupt latch.

Note 2: When INT0EN = "0", IL4 is not set even if a falling edge is detected on the $\overline{\text{INT0}}$ pin input.

Note 3: When a pin with more than one function is used as an output and a change occurs in data or input/output status, an interrupt request signal is generated in a pseudo manner. In this case, it is necessary to perform appropriate processing such as disabling the interrupt enable flag.

Not Recommended for New Design

External Interrupt Control Register

EINTCR	7	6	5	4	3	2	1	0	
(0037H)	INT1NC	INT0EN	INT3ES		INT4ES		INT1ES		(Initial value: 0000 000*)

INT1NC	Noise reject time select	0: Pulses of less than 63/fc [s] are eliminated as noise 1: Pulses of less than 15/fc [s] are eliminated as noise	R/W
INT0EN	P10/$\overline{\text{INT0}}$ pin configuration	0: P10 input/output port 1: $\overline{\text{INT0}}$ pin (Port P10 should be set to an input mode)	R/W
INT4 ES	INT4 edge select	00: Rising edge 01: Falling edge 10: Rising edge and Falling edge 11: "H" level	R/W
INT3 ES	INT3 edge select	00: Rising edge 01: Falling edge 10: Rising edge and Falling edge 11: "H" level	R/W
INT1 ES	INT1 edge select	0: Rising edge 1: Falling edge	R/W

Note 1: fc: High-frequency clock [Hz], *: Don't care

Note 2: When the system clock frequency is switched between high and low or when the external interrupt control register (EINTCR) is overwritten, the noise canceller may not operate normally. It is recommended that external interrupts are disabled using the interrupt enable register (EIR).

Note 3: The maximum time from modifying INT1NC until a noise reject time is changed is 2^6/fc.

Note 4: In case $\overline{\text{RESET}}$ pin is released while the state of INT3 pin keeps "H" level, the external interrupt 3 request is not generated even if the INT3 edge select is specified as "H" level. The rising edge is needed after $\overline{\text{RESET}}$ pin is released.

Note 5: In case $\overline{\text{RESET}}$ pin is released while the state of INT4 pin keeps "H" level, the external interrupt 4 request is not generated even if the INT4 edge select is specified as "H" level. The rising edge is needed after $\overline{\text{RESET}}$ pin is released.

Not Recommended for New Design

Not Recommended for New Design

4. Special Function Register (SFR)

The TMP86P807NG adopts the memory mapped I/O system, and all peripheral control and data transfers are performed through the special function register (SFR). The SFR is mapped on address 0000H to 003FH.

This chapter shows the arrangement of the special function register (SFR) for TMP86P807NG.

4.1 SFR

Address	Read	Write
0000H	P0DR	
0001H	P1DR	
0002H	P2DR	
0003H	P3DR	
0004H	Reserved	
0005H	Reserved	
0006H	Reserved	
0007H	Reserved	
0008H	Reserved	
0009H	P1CR	
000AH	P3CR	
000BH	P0OUTCR	
000CH	P0PRD	-
000DH	P2PRD	-
000EH	ADCCR1	
000FH	ADCCR2	
0010H	TC1DRAL	
0011H	TC1DRAH	
0012H	TC1DRBL	
0013H	TC1DRBH	
0014H	TC1CR	
0015H	Reserved	
0016H	Reserved	
0017H	Reserved	
0018H	Reserved	
0019H	Reserved	
001AH	TC3CR	
001BH	TC4CR	
001CH	TTREG3	
001DH	TTREG4	
001EH	PWREG3	
001FH	PWREG4	
0020H	ADCDR1	-
0021H	ADCDR2	-
0022H	Reserved	
0023H	Reserved	
0024H	Reserved	
0025H	UARTSR	UARTCR1
0026H	-	UARTCR2
0027H	RDBUF	TDBUF

Not Recommended for New Design

Address	Read	Write
0028H		-
0029H	Reserved	
002AH		
002BH	Reserved	
002CH	Reserved	
002DH	Reserved	
002EH	Reserved	
002FH	Reserved	
0030H	Reserved	
0031H	-	STOPCR
0032H	Reserved	
0033H	Reserved	
0034H	-	WDTCR1
0035H	-	WDTCR2
0036H	TBTCR	
0037H	EINTCR	
0038H	SYSCR1	
0039H	SYSCR2	
003AH	EIRL	
003BH	EIRH	
003CH	ILL	
003DH	ILH	
003EH	INTSEL	
003FH	PSW	

Note 1: Do not access reserved areas by the program.

Note 2: – ; Cannot be accessed.

Note 3: Write-only registers and interrupt latches cannot use the read-modify-write instructions (Bit manipulation instructions such as SET, CLR, etc. and logical operation instructions such as AND, OR, etc.).

Not Recommended for New Design

5. I/O Ports

The TMP86P807NG have 4 parallel input/output ports as follows.

	Primary Function	Secondary Functions
Port P0	8-bit I/O port	External interrupt input, Timer/Counter input/output, serial interface input/output
Port P1	3-bit I/O port	External interrupt input and divider output
Port P2	3-bit I/O port	External interrupt input and STOP mode release signal input
Port P3	8-bit I/O port	Analog input, STOP mode release signal input and Timer/Counter input/output

Each output port contains a latch, which holds the output data. All input ports do not have latches, so the external input data should be externally held until the input data is read from outside or reading should be performed several timer before processing. Figure 5-1 shows input/output timing examples.

External data is read from an I/O port in the S1 state of the read cycle during execution of the read instruction. This timing cannot be recognized from outside, so that transient input such as chattering must be processed by the program.

Output data changes in the S2 state of the write cycle during execution of the instruction which writes to an I/O port.

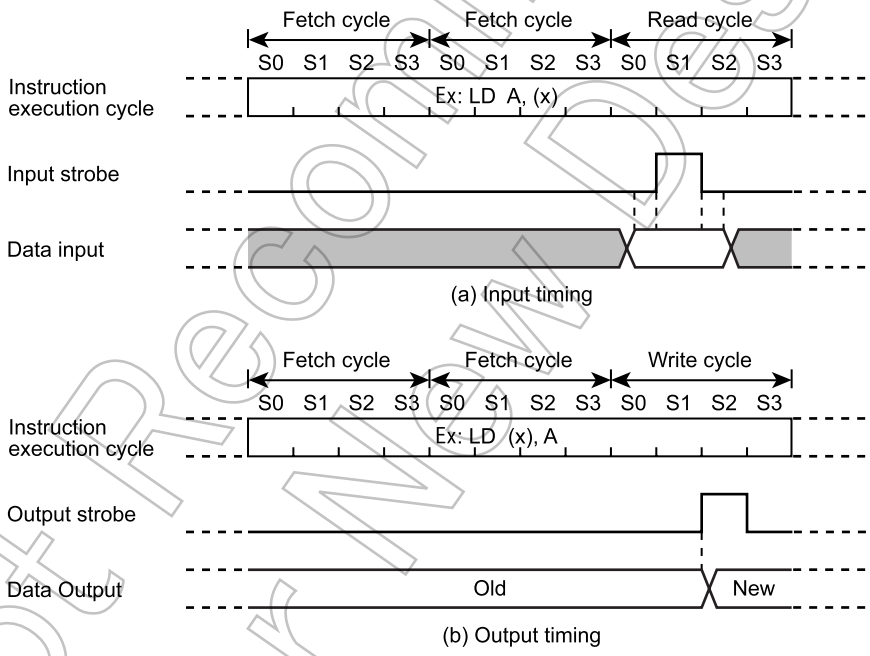

Note: The positions of the read and write cycles may vary, depending on the instruction.

Figure 5-1 Input/Output Timing (Example)

Not Recommended for New Design

5.1 P0 (P07 to P00) Port (High Current)

The P0 port is an 8-bit input/output port shared with external interrupt input, SEI serial interface input/output, and UART and 16-bit timer counter input/output. When using this port as an input port or for external interrupt input, SEI serial interface input/output, or UART input/output, set the output latch to 1. When using this port as an output port, the output latch data (P0DR) is output to the P0 port.

When reset, the output latch (P0DR) and the push-pull control register (P0OUTCR) are initialized to 1 and 0, respectively.

The P0 port allows its output circuit to be selected between N-channel open-drain output or push-pull output by the P0OUTCR register.

When using this port as an input port, set the P0OUTCR register's corresponding bit to 0 after setting the P0DR to 1.
The P0 port has independent data input registers. To inspect the output latch status, read the P0DR register. To inspect the pin status, read the P0PRD register.

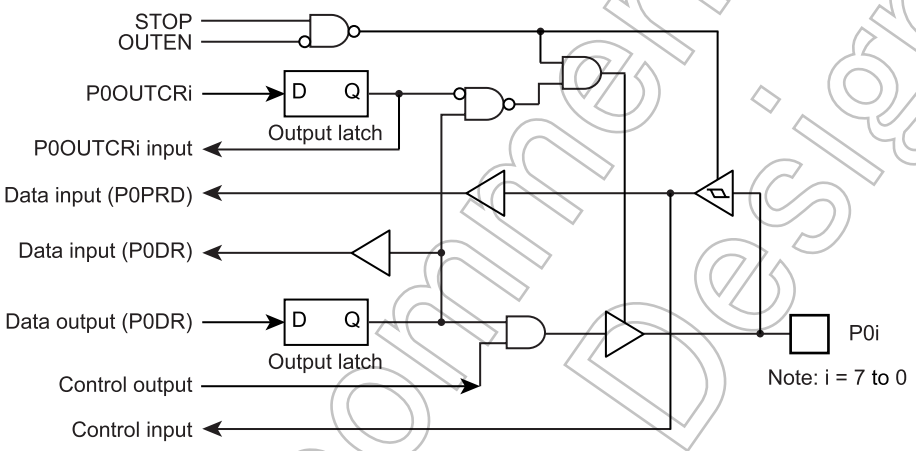

Figure 5-2 P0 Port

	7	6	5	4	3	2	1	0	
P0DR (0000H) R/W	P07 TC1 INT4	P06 INT3 $\overline{PPG}$	P05 $\overline{SS}$	P04 MISO	P03 MOSI	P02 SCLK	P01 RxD	P00 TxD	(Initial value: 1111 1111)
P0PRD (000CH) Read only	P07	P06	P05	P04	P03	P02	P01	P00	

P0OUTCR (000BH)	P0OUTCR	Controls P0 port input/output (specified bitwise)	0: Nch open-drain output 1: Push-pull output	R/W

Not Recommended for New Design

5.2 P1 (P12 to P10) Port

The P1 port is a 3-bit input/output port that can be specified for input or output bitwise. The P1 Port Input/output Control Register (P1CR) is used to specify this port for input or output. When reset, the P1CR register is initialized to 0, with the P1 port set for input mode. The P1 port output latch is initialized to 0.

The P1 port is shared with external interrupt input and divider output. When using the P1 port as function pin, set its input pins for input mode. For the output pins, first set their output latches to 1 before setting the pins for output mode.

Note that the P11 pin is an external interrupt input. (When used as an output port, its interrupt latch is set at the rising or falling edge.) The P10 pin can be used as an input/output port or an external interrupt input by selecting its function with the External Interrupt Control Register (INT0EN). When reset, the P10 pin is chosen to be an input port.

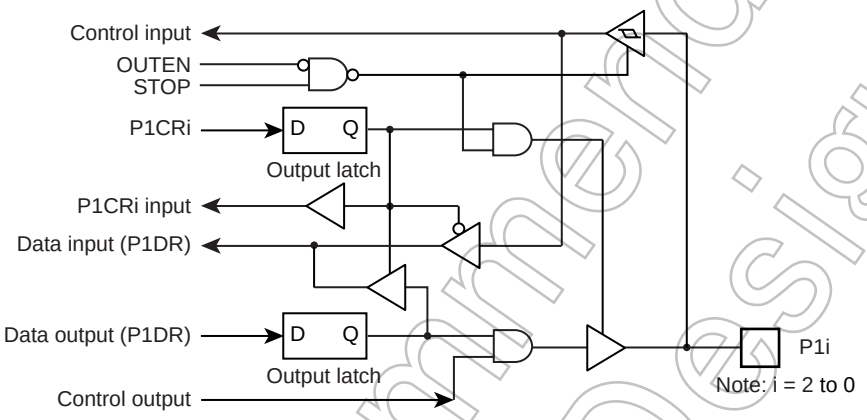

Figure 5-3 P1 Port

	7	6	5	4	3	2	1	0	
P1DR (0001H) R/W						P12 $\overline{\text{DVO}}$	P11 INT1	P10 $\overline{\text{INT0}}$	(Initial value: **** *0000)
P1CR (0009H)	7	6	5	4	3	2	1	0	
									(Initial value: **** *000)

P1CR	Controls P1 port input/output (specified bitwise)	0: Input mode 1: Output mode	R/W

Not Recommended for New Design

5.3 P2 (P22 to P20) Port

The P2 port is a 3-bit input/output port shared with external interrupt input, STOP canceling signal input, and low-frequency resonator connecting pin. When using this port as an input port or function pin, set the output latch to 1. The output latch is initialized to 1 when reset. When operating in dual-clock mode, connect a low-frequency resonator (32.768 kHz) to the P21 (XTIN) and P22 (XTOUT) pins. When operating in single-clock mode, the P21 and P22 pins can be used as ordinary input/output ports. We recommend using the P20 pin for external interrupt input or STOP canceling signal input or as an input port. (When used as an output port, the interrupt latch is set by a falling edge.)

The P2 port has independent data input registers. To inspect the output latch status, read the P2DR register. To inspect the pin status, read the P2PRD register. When the P2DR or P2PRD read instruction is executed for the P2 port, the values read from bits 7 to 3 are indeterminate.

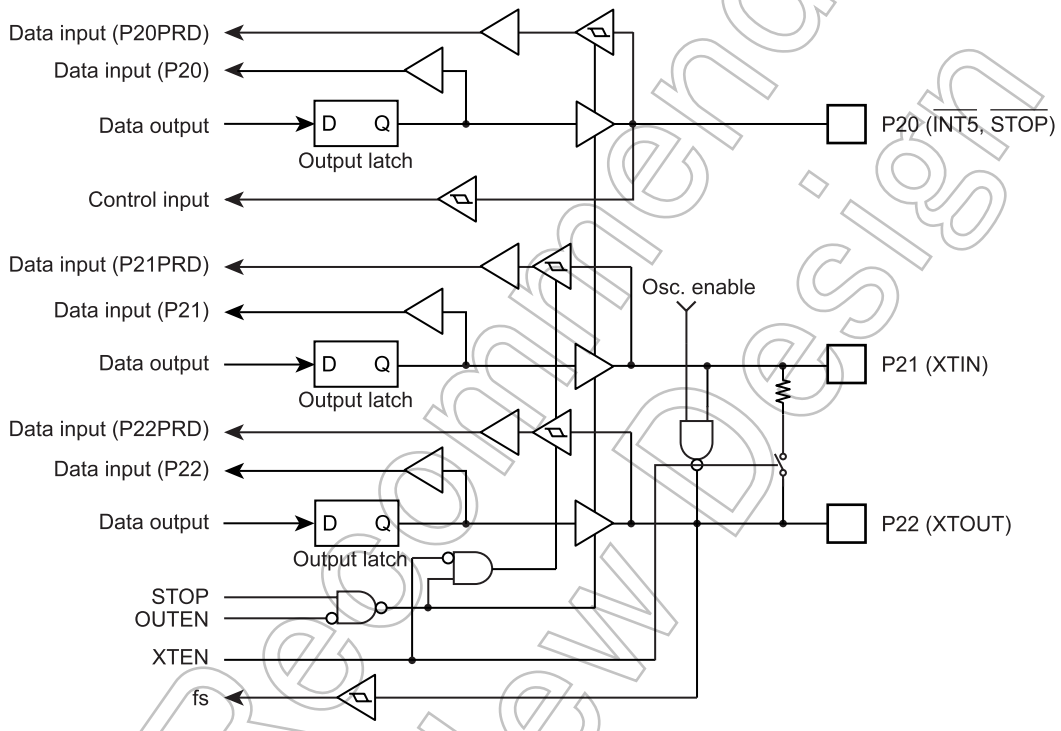

Figure 5-4 P2 Port

	7	6	5	4	3	2	1	0	
P2DR (0002H) R/W						P22 XTOUT	P21 XTIN	P20 INT5 STOP	(Initial value: **** *111)
P2PRD (000DH) Read only						P22	P21	P20	

Note: The P20 pin is shared with the STOP pin, so that when in STOP mode, its output goes to a High-Z state regardless of the OUTEN status.

Not Recommended for New Design

5.4 P3 (P37 to P30) Port

The P3 port is an 8-bit input/output port that can be specified for input or output bitwise, and is shared with analog input, key-on wakeup input, and 8-bit timer counter input/output. The P3 Port Input/output Control Register (P3CR) and ADCCR1<AINDS> are used to specify this port for input or output. When reset, the P3CR register and P3DR are cleared to 0, while AINDS is set to 1, so that P37 to P30 function as input port.

When using the P3 port as an input port, set AINDS = 1 while at the same time setting the P3CR register to 0.

When using the P3 port for analog input, set AINDS = 0 and the pins selected with ADCCR1<SAIN > are set for analog input no matter what values are set in the P3DR and P3CR. When using the P3 port as an output port, set the P3CR to 1 and the pin associated with that bit is set for output mode, so that P3DR (output latch data) is output from that pin.

When an input instruction is executed for the P3 port while using the AD converter, the pins selected for analog input read in the P3DR value into the internal circuit and those not selected for analog input read in a 1 or 0 according to the logic level on each pin. Even when an output instruction is executed, no latch data are forwarded to the pins selected for analog input.

Any pins of the P3 port which are not used for analog input can be used as input/output ports. During AD conversion, however, avoid executing output instructions on these ports, because this is necessary to maintain the accuracy of conversion. Also, during AD conversion, take care not to enter a rapidly changing signal to any port adjacent to analog input.

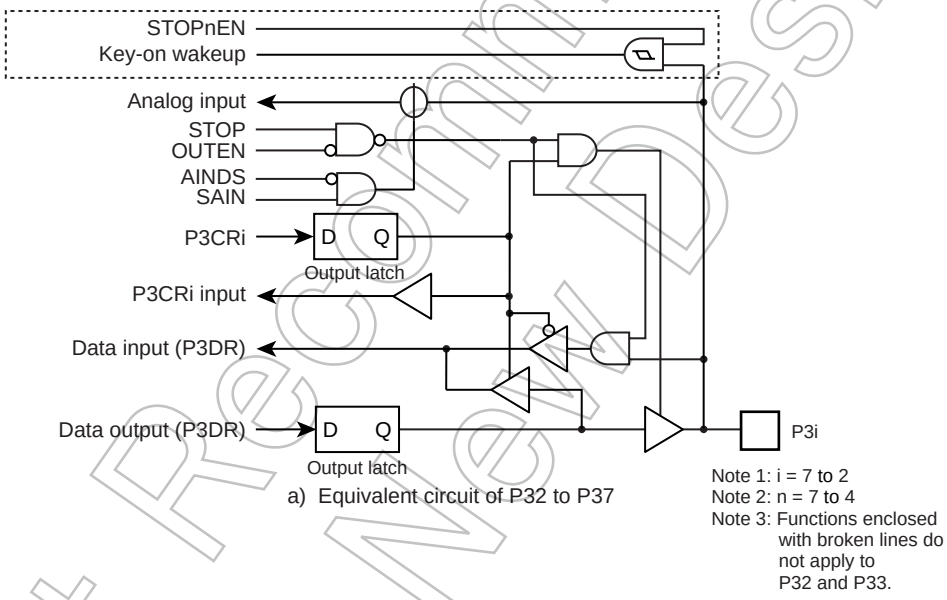

a) Equivalent circuit of P32 to P37

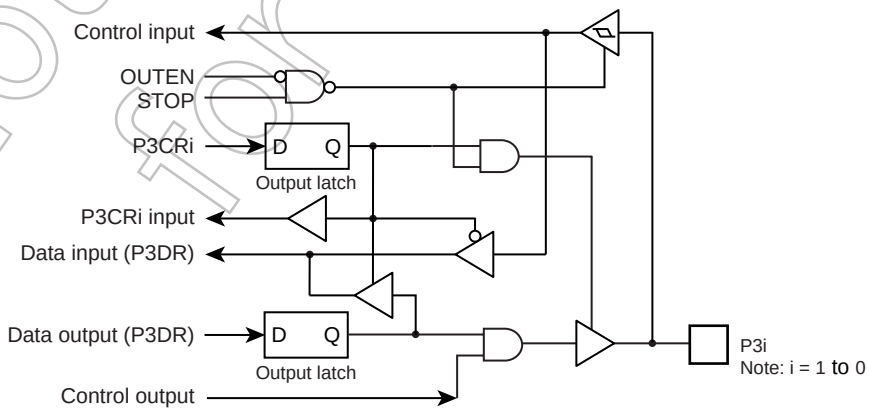

b) Equivalent circuit of P30, P31

Figure 5-5 P3 Port

Not Recommended for New Design

	7	6	5	4	3	2	1	0	
P3DR (0003H) R/W	P37 AIN5 STOP5	P36 AIN4 STOP4	P35 AIN3 STOP3	P34 AIN2 STOP2	P33 AIN1	P32 AIN0	P31 TC4 $\overline{\text{PDO4}}$ $\overline{\text{PWM4}}$ $\overline{\text{PPG4}}$	P30 TC3 $\overline{\text{PDO3}}$ $\overline{\text{PWM3}}$	(Initial value: 0000 0000)
P3CR (000AH)	7	6	5	4	3	2	1	0	
									(Initial value: 0000 0000)

P3CR	Controls P3 port output (specified bitwise)	0: Input mode 1: Output mode	R/W

<P3 Port Input/Output>

	Analog Input Mode	Input Mode	Output Mode
P3CR	0		1
AINDS	0	1	
P3DR	0	*	

Note 1: When using the port for key-on wakeup input (STOP2 to 5), set the P3CR register's corresponding bits to 0.

Note 2: P30 and P31 are hysteresis inputs. P34 to P37 become hysteresis inputs only during key-on wakeup.

Note 3: Input status on ports set for input mode are read in into the internal circuit. Therefore, when using the ports in a mixture of input and output modes, the contents of the output latches for the ports that are set for input mode may be rewritten by execution of bit manipulating instructions.

Not Recommended for New Design

6. Time Base Timer (TBT)

The time base timer generates time base for key scanning, dynamic displaying, etc. It also provides a time base timer interrupt (INTTBT).

6.1 Time Base Timer

6.1.1 Configuration

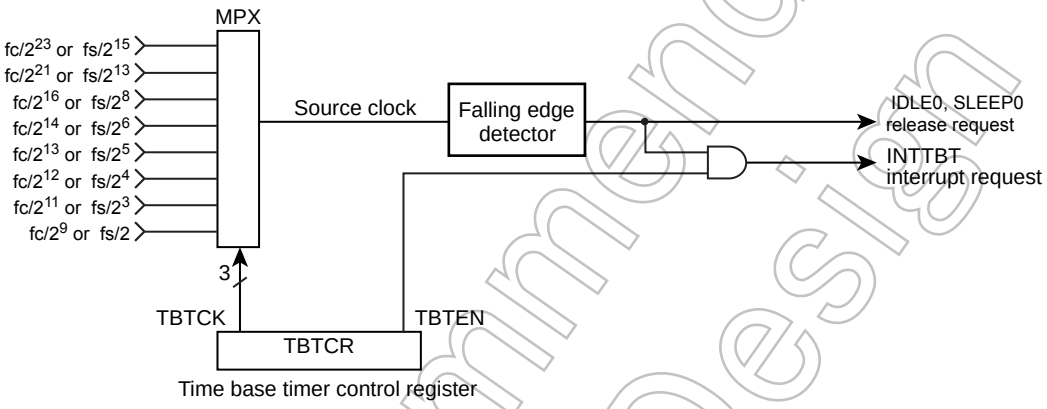

Figure 6-1 Time Base Timer configuration

6.1.2 Control

Time Base Timer is controlled by Time Base Timer control register (TBTCR).

Time Base Timer Control Register

	7	6	5	4	3	2	1	0	
TBTCR (0036H)	(DVOEN)	(DVOCK)		(DV7CK)	TBTEN	TBTCK			(Initial Value: 0000 0000)

TBTEN	Time Base Timer enable / disable	0: Disable 1: Enable				
TBTCK	Time Base Timer interrupt Frequency select : [Hz]		NORMAL1/2, IDLE1/2 Mode		SLOW1/2 SLEEP1/2 Mode	R/W
			DV7CK = 0	DV7CK = 1		
		000	fc/2^23	fs/2^15	fs/2^15	
		001	fc/2^21	fs/2^13	fs/2^13	
		010	fc/2^16	fs/2^8	–	
		011	fc/2^14	fs/2^6	–	
		100	fc/2^13	fs/2^5	–	
		101	fc/2^12	fs/2^4	–	
		110	fc/2^11	fs/2^3	–	
		111	fc/2^9	fs/2	–	

Note 1: fc; High-frequency clock [Hz], fs; Low-frequency clock [Hz], *; Don't care

Not Recommended for New Design

Note 2: The interrupt frequency (TBTCK) must be selected with the time base timer disabled (TBTEN="0"). (The interrupt frequency must not be changed with the disable from the enable state.) Both frequency selection and enabling can be performed simultaneously.

Example :Set the time base timer frequency to fc/2^{16} [Hz] and enable an INTTBT interrupt.

```
LD      (TBTCR) ,  00000010B      ; TBTCK ← 010
LD      (TBTCR) ,  00001010B      ; TBTEN ← 1
DI                                ; IMF ← 0
SET     (EIRL) . 6
```

Table 6-1 Time Base Timer Interrupt Frequency (Example : fc = 16.0 MHz, fs = 32.768 kHz)

TBTCK	Time Base Timer Interrupt Frequency [Hz]		
	NORMAL1/2, IDLE1/2 Mode	NORMAL1/2, IDLE1/2 Mode	SLOW1/2, SLEEP1/2 Mode
	DV7CK = 0	DV7CK = 1	
000	1.91	1	1
001	7.63	4	4
010	244.14	128	–
011	976.56	512	–
100	1953.13	1024	–
101	3906.25	2048	–
110	7812.5	4096	–
111	31250	16384	–

6.1.3 Function

An INTTBT (Time Base Timer Interrupt) is generated on the first falling edge of source clock (The divider output of the timing generator which is selected by TBTCK.) after time base timer has been enabled.

The divider is not cleared by the program; therefore, only the first interrupt may be generated ahead of the set interrupt period (Figure 6-2).

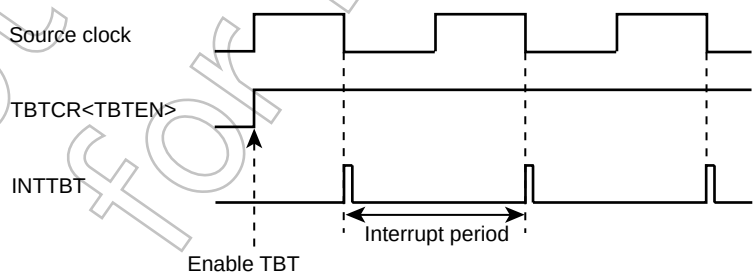

Figure 6-2 Time Base Timer Interrupt

Not Recommended for New Design

6.2 Divider Output ($\overline{DVO}$)

Approximately 50% duty pulse can be output using the divider output circuit, which is useful for piezoelectric buzzer drive. Divider output is from $\overline{DVO}$ pin.

6.2.1 Configuration

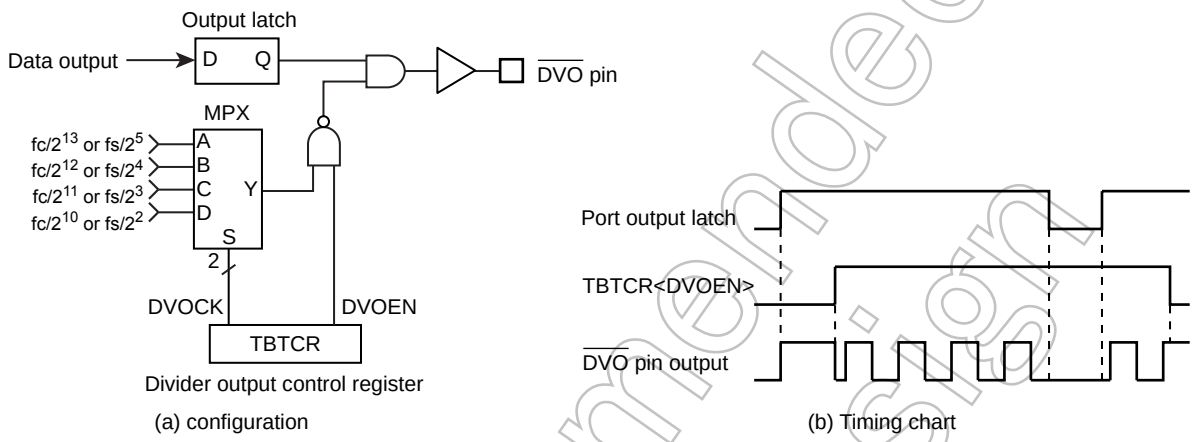

Figure 6-3 Divider Output

6.2.2 Control

The Divider Output is controlled by the Time Base Timer Control Register.

Time Base Timer Control Register

	7	6	5	4	3	2	1	0	
TBTCR (0036H)	DVOEN	DVOCK		(DV7CK)	(TBTEN)	(TBTCK)			(Initial value: 0000 0000)

DVOEN	Divider output enable / disable	0: Disable 1: Enable				R/W
DVOCK	Divider Output ($\overline{DVO}$) frequency selection: [Hz]		NORMAL1/2, IDLE1/2 Mode		SLOW1/2 SLEEP1/2 Mode	R/W
			DV7CK = 0	DV7CK = 1		
		00	fc/2^{13}	fs/2^5	fs/2^5	
		01	fc/2^{12}	fs/2^4	fs/2^4	
		10	fc/2^{11}	fs/2^3	fs/2^3	
		11	fc/2^{10}	fs/2^2	fs/2^2	

Note: Selection of divider output frequency (DVOCK) must be made while divider output is disabled (DVOEN="0"). Also, in other words, when changing the state of the divider output frequency from enabled (DVOEN="1") to disable(DVOEN="0"), do not change the setting of the divider output frequency.

Not Recommended for New Design

Example :1.95 kHz pulse output (fc = 16.0 MHz)

```
LD      (TBTCR) ,  00000000B        ; DVOCK ← "00"
LD      (TBTCR) ,  10000000B        ; DVOEN ← "1"
```

Table 6-2 Divider Output Frequency (Example : fc = 16.0 MHz, fs = 32.768 kHz)

DVOCK	Divider Output Frequency [Hz]		
	NORMAL1/2, IDLE1/2 Mode		SLOW1/2, SLEEP1/2 Mode
	DV7CK = 0	DV7CK = 1	
00	1.953 k	1.024 k	1.024 k
01	3.906 k	2.048 k	2.048 k
10	7.813 k	4.096 k	4.096 k
11	15.625 k	8.192 k	8.192 k

Not Recommended for New Design

7. Watchdog Timer (WDT)

The watchdog timer is a fail-safe system to detect rapidly the CPU malfunctions such as endless loops due to spurious noises or the deadlock conditions, and return the CPU to a system recovery routine.

The watchdog timer signal for detecting malfunctions can be programmed only once as “reset request” or “interrupt request”. Upon the reset release, this signal is initialized to “reset request”.

When the watchdog timer is not used to detect malfunctions, it can be used as the timer to provide a periodic interrupt.

Note: Care must be taken in system design since the watchdog timer functions are not be operated completely due to effect of disturbing noise.

7.1 Watchdog Timer Configuration

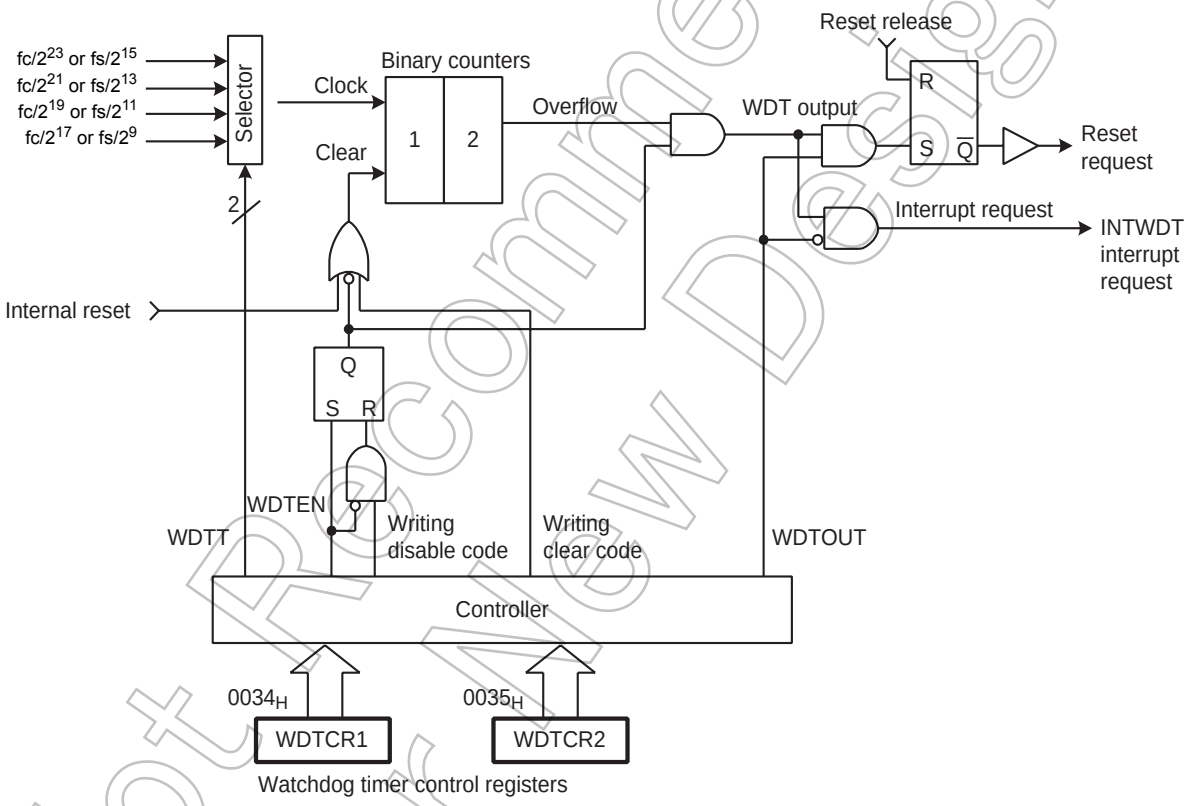

Figure 7-1 Watchdog Timer Configuration

Not Recommended for New Design

7.2 Watchdog Timer Control

The watchdog timer is controlled by the watchdog timer control registers (WDTCR1 and WDTCR2). The watchdog timer is automatically enabled after the reset release.

7.2.1 Malfunction Detection Methods Using the Watchdog Timer

The CPU malfunction is detected, as shown below.

1. Set the detection time, select the output, and clear the binary counter.
2. Clear the binary counter repeatedly within the specified detection time.

If the CPU malfunctions such as endless loops or the deadlock conditions occur for some reason, the watchdog timer output is activated by the binary-counter overflow unless the binary counters are cleared. When WDTCR1<WDTOUT> is set to “1” at this time, the reset request is generated and then internal hardware is initialized. When WDTCR1<WDTOUT> is set to “0”, a watchdog timer interrupt (INTWDT) is generated.

The watchdog timer temporarily stops counting in the STOP mode including the warm-up or IDLE/SLEEP mode, and automatically restarts (continues counting) when the STOP/IDLE/SLEEP mode is inactivated.

Note: The watchdog timer consists of an internal divider and a two-stage binary counter. When the clear code 4EH is written, only the binary counter is cleared, but not the internal divider. The minimum binary-counter overflow time, that depends on the timing at which the clear code (4EH) is written to the WDTCR2 register, may be 3/4 of the time set in WDTCR1<WDTT>. Therefore, write the clear code using a cycle shorter than 3/4 of the time set to WDTCR1<WDTT>.

Example :Setting the watchdog timer detection time to 2^{21}/fc [s], and resetting the CPU malfunction detection

```
                LD      (WDTCR2), 4EH       : Clears the binary counters.
                LD      (WDTCR1), 00001101B : WDTT ← 10, WDTOUT ← 1
                LD      (WDTCR2), 4EH       : Clears the binary counters (always clears immediately before and
                                              after changing WDTT).
Within 3/4 of WDT  :
detection time     :
                LD      (WDTCR2), 4EH       : Clears the binary counters.
                :
Within 3/4 of WDT  :
detection time     :
                LD      (WDTCR2), 4EH       : Clears the binary counters.
```

Not Recommended for New Design

Watchdog Timer Control Register 1

WDTCR1 (0034H)	7	6	5	4	3	2	1	0	
			(ATAS)	(ATOUT)	WDTEN	WDTT		WDTOUT	(Initial value: **11 1001)

WDTEN	Watchdog timer enable/disable	0: Disable (Writing the disable code to WDTCR2 is required.) 1: Enable				Write only
WDTT	Watchdog timer detection time [s]		NORMAL1/2 mode		SLOW1/2 mode	Write only
			DV7CK = 0	DV7CK = 1		
		00	2^{25}/fc	2^{17}/fs	2^{17}/fs	
		01	2^{23}/fc	2^{15}/fs	2^{15}fs	
		10	2^{21}fc	2^{13}/fs	2^{13}fs	
		11	2^{19}/fc	2^{11}/fs	2^{11}/fs	
WDTOUT	Watchdog timer output select	0: Interrupt request 1: Reset request				Write only

Note 1: After clearing WDTOUT to “0”, the program cannot set it to “1”.

Note 2: fc: High-frequency clock [Hz], fs: Low-frequency clock [Hz], *: Don’t care

Note 3: WDTCR1 is a write-only register and must not be used with any of read-modify-write instructions. If WDTCR1 is read, a don’t care is read.

Note 4: To activate the STOP mode, disable the watchdog timer or clear the counter immediately before entering the STOP mode. After clearing the counter, clear the counter again immediately after the STOP mode is inactivated.

Note 5: To clear WDTEN, set the register in accordance with the procedures shown in “7.2.3 Watchdog Timer Disable”.

Watchdog Timer Control Register 2

WDTCR2 (0035H)	7	6	5	4	3	2	1	0	
									(Initial value: **** ****)

WDTCR2	Write Watchdog timer control code	4EH: Clear the watchdog timer binary counter (Clear code) B1H: Disable the watchdog timer (Disable code) D2H: Enable assigning address trap area Others: Invalid	Write only

Note 1: The disable code is valid only when WDTCR1<WDTEN> = 0.

Note 2: *: Don’t care

Note 3: The binary counter of the watchdog timer must not be cleared by the interrupt task.

Note 4: Write the clear code 4EH using a cycle shorter than 3/4 of the time set in WDTCR1<WDTT>.

7.2.2 Watchdog Timer Enable

Setting WDTCR1<WDTEN> to “1” enables the watchdog timer. Since WDTCR1<WDTEN> is initialized to “1” during reset, the watchdog timer is enabled automatically after the reset release.

Not Recommended for New Design

7.2.3 Watchdog Timer Disable

To disable the watchdog timer, set the register in accordance with the following procedures. Setting the register in other procedures causes a malfunction of the microcontroller.

1. Set the interrupt master flag (IMF) to “0”.
2. Set WDTCR2 to the clear code (4EH).
3. Set WDTCR1<WDTEN> to “0”.
4. Set WDTCR2 to the disable code (B1H).

Note: While the watchdog timer is disabled, the binary counters of the watchdog timer are cleared.

Example :Disabling the watchdog timer

```
DI                                  : IMF ← 0
LD      (WDTCR2), 04EH              : Clears the binary counter
LDW     (WDTCR1), 0B101H            : WDTEN ← 0, WDTCR2 ← Disable code
```

Table 7-1 Watchdog Timer Detection Time (Example: fc = 16.0 MHz, fs = 32.768 kHz)

WDTT	Watchdog Timer Detection Time[s]		
	NORMAL1/2 mode		SLOW mode
	DV7CK = 0	DV7CK = 1	
00	2.097	4	4
01	524.288 m	1	1
10	131.072 m	250 m	250 m
11	32.768 m	62.5 m	62.5 m

7.2.4 Watchdog Timer Interrupt (INTWDT)

When WDTCR1<WDTOUT> is cleared to “0”, a watchdog timer interrupt request (INTWDT) is generated by the binary-counter overflow.

A watchdog timer interrupt is the non-maskable interrupt which can be accepted regardless of the interrupt master flag (IMF).

When a watchdog timer interrupt is generated while the other interrupt including a watchdog timer interrupt is already accepted, the new watchdog timer interrupt is processed immediately and the previous interrupt is held pending. Therefore, if watchdog timer interrupts are generated continuously without execution of the RETN instruction, too many levels of nesting may cause a malfunction of the microcontroller.

To generate a watchdog timer interrupt, set the stack pointer before setting WDTCR1<WDTOUT>.

Example :Setting watchdog timer interrupt

```
LD      SP, 013FH                   : Sets the stack pointer
LD      (WDTCR1), 00001000B         : WDTOUT ← 0
```

Not Recommended for New Design

7.2.5 Watchdog Timer Reset

When a binary-counter overflow occurs while WDTCR1<WDTOUT> is set to “1”, a watchdog timer reset request is generated. When a watchdog timer reset request is generated, the internal hardware is reset. The reset time is maximum 24/fc [s] (1.5 μs @ fc = 16.0 MHz).

Note: When a watchdog timer reset is generated in the SLOW1 mode, the reset time is maximum 24/fc (high-frequency clock) since the high-frequency clock oscillator is restarted. However, when crystals have inaccuracies upon start of the high-frequency clock oscillator, the reset time should be considered as an approximate value because it has slight errors.

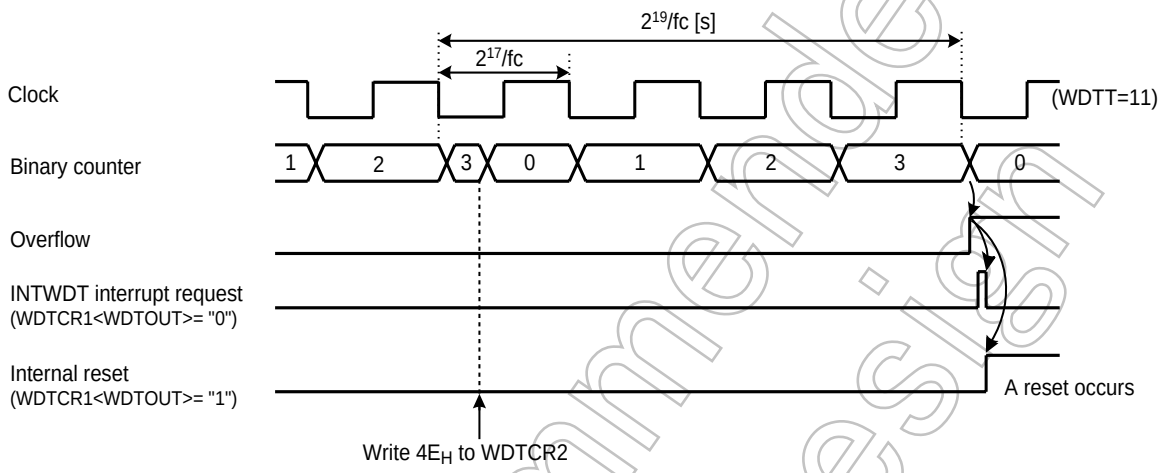

Figure 7-2 Watchdog Timer Interrupt

Not Recommended for New Design

7.3 Address Trap

The Watchdog Timer Control Register 1 and 2 share the addresses with the control registers to generate address traps.

Watchdog Timer Control Register 1

WDTCR1 (0034H)	7	6	5	4	3	2	1	0	
			ATAS	ATOUT	(WDTEN)	(WDTT)		(WDTOUT)	(Initial value: **11 1001)

ATAS	Select address trap generation in the internal RAM area	0: Generate no address trap 1: Generate address traps (After setting ATAS to "1", writing the control code D2H to WDTCR2 is required)	Write only
ATOUT	Select operation at address trap	0: Interrupt request 1: Reset request	

Watchdog Timer Control Register 2

WDTCR2 (0035H)	7	6	5	4	3	2	1	0	
									(Initial value: **** ****)

WDTCR2	Write Watchdog timer control code and address trap area control code	D2H: Enable address trap area selection (ATRAP control code) 4EH: Clear the watchdog timer binary counter (WDT clear code) B1H: Disable the watchdog timer (WDT disable code) Others: Invalid	Write only

7.3.1 Selection of Address Trap in Internal RAM (ATAS)

WDTCR1<ATAS> specifies whether or not to generate address traps in the internal RAM area. To execute an instruction in the internal RAM area, clear WDTCR1<ATAS> to "0". To enable the WDTCR1<ATAS> setting, set WDTCR1<ATAS> and then write D2H to WDTCR2.

Executing an instruction in the SFR area generates an address trap unconditionally regardless of the setting in WDTCR1<ATAS>.

7.3.2 Selection of Operation at Address Trap (ATOUT)

When an address trap is generated, either the interrupt request or the reset request can be selected by WDTCR1<ATOUT>.

7.3.3 Address Trap Interrupt (INTATRAP)

While WDTCR1<ATOUT> is "0", if the CPU should start looping for some cause such as noise and an attempt be made to fetch an instruction from the on-chip RAM (while WDTCR1<ATAS> is "1") or the SFR area, address trap interrupt (INTATRAP) will be generated.

An address trap interrupt is a non-maskable interrupt which can be accepted regardless of the interrupt master flag (IMF).

When an address trap interrupt is generated while the other interrupt including an address trap interrupt is already accepted, the new address trap is processed immediately and the previous interrupt is held pending. Therefore, if address trap interrupts are generated continuously without execution of the RETN instruction, too many levels of nesting may cause a malfunction of the microcontroller.

To generate address trap interrupts, set the stack pointer beforehand.

Not Recommended for New Design

7.3.4 Address Trap Reset

While WDTCR1<ATOUT> is “1”, if the CPU should start looping for some cause such as noise and an attempt be made to fetch an instruction from the on-chip RAM (while WDTCR1<ATAS> is “1”) or the SFR area, address trap reset will be generated.

When an address trap reset request is generated, the internal hardware is reset. The reset time is maximum 24/fc [s] (1.5 μs @ fc = 16.0 MHz).

Note: When an address trap reset is generated in the SLOW1 mode, the reset time is maximum 24/fc (high-frequency clock) since the high-frequency clock oscillator is restarted. However, when crystals have inaccuracies upon start of the high-frequency clock oscillator, the reset time should be considered as an approximate value because it has slight errors.

Not Recommended for New Design

Not Recommended for New Design

8. 16-Bit TimerCounter 1 (TC1)

8.1 Configuration

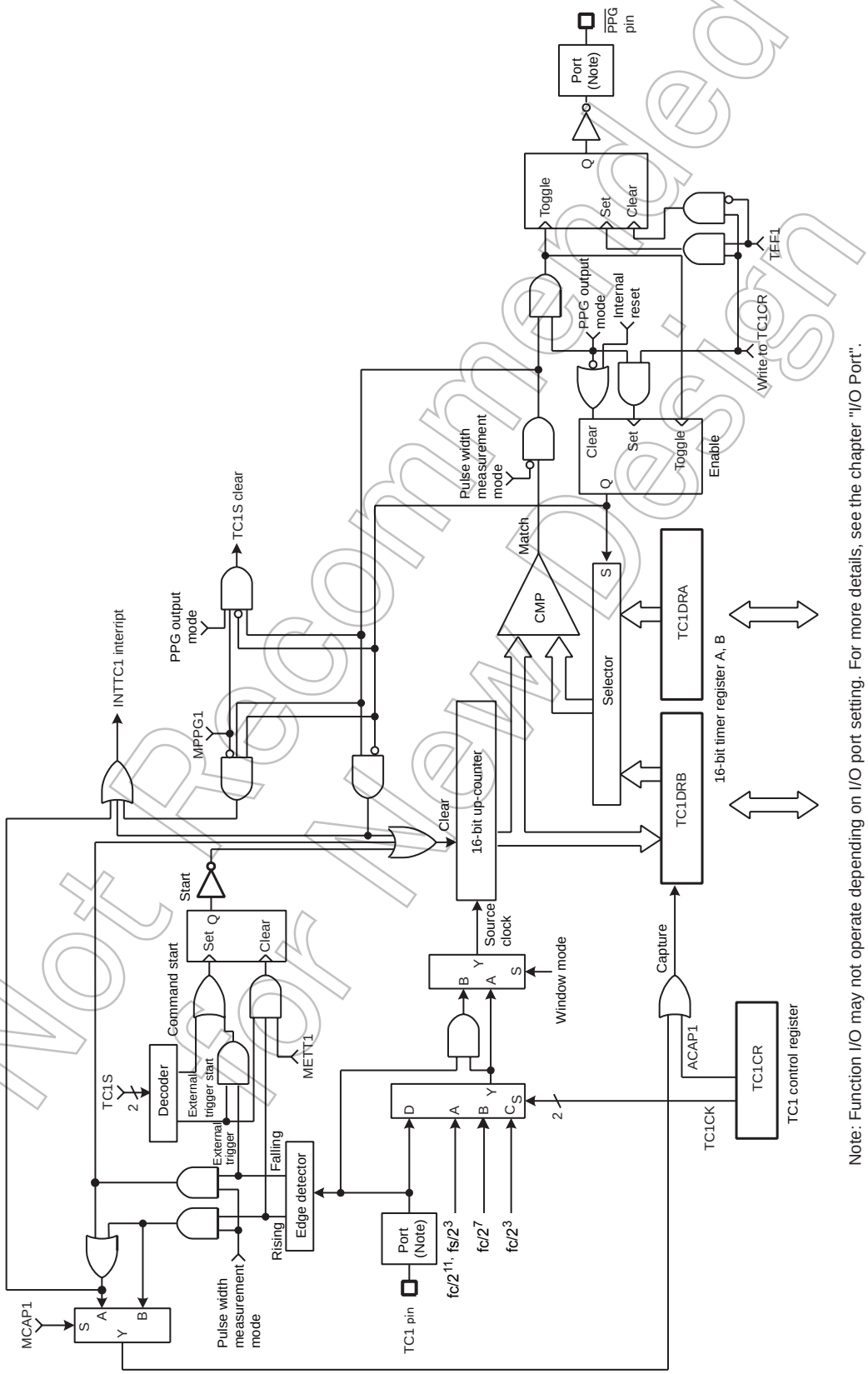

Figure 8-1 TimerCounter 1 (TC1)

Not Recommended for New Design

8.2 TimerCounter Control

The TimerCounter 1 is controlled by the TimerCounter 1 control register (TC1CR) and two 16-bit timer registers (TC1DRA and TC1DRB).

Timer Register

	15	14	13	12	11	10	9	8	7	6	5	4	3	2	1	0
TC1DRA (0011H, 0010H)	TC1DRAH (0011H)								TC1DRAL (0010H)							
	(Initial value: 1111 1111 1111 1111)								Read/Write							
TC1DRB (0013H, 0012H)	TC1DRBH (0013H)								TC1DRBL (0012H)							
	(Initial value: 1111 1111 1111 1111)								Read/Write (Write enabled only in the PPG output mode)							

TimerCounter 1 Control Register

	7	6	5	4	3	2	1	0	
TC1CR (0014H)	TFF1	ACAP1 MCAP1 METT1 MPPG1	TC1S		TC1CK		TC1M		Read/Write (Initial value: 0000 0000)

TFF1	Timer F/F1 control	0: Clear	1: Set						R/W
ACAP1	Auto capture control	0:Auto-capture disable	1:Auto-capture enable						R/W
MCAP1	Pulse width measure-ment mode control	0:Double edge capture	1:Single edge capture						
METT1	External trigger timer mode control	0:Trigger start	1:Trigger start and stop						
MPPG1	PPG output control	0:Continuous pulse generation	1:One-shot						
TC1S	TC1 start control		Timer	Extrig-ger	Event	Win-dow	Pulse	PPG	R/W
		00: Stop and counter clear	O	O	O	O	O	O	
		01: Command start	O	–	–	–	–	O	
		10: Rising edge start (Ex-trigger/Pulse/PPG) Rising edge count (Event) Positive logic count (Window)	–	O	O	O	O	O	
		11: Falling edge start (Ex-trigger/Pulse/PPG) Falling edge count (Event) Negative logic count (Window)	–	O	O	O	O	O	
TC1CK	TC1 source clock select [Hz]		NORMAL1/2, IDLE1/2 mode				Divider	SLOW, SLEEP mode	R/W
			DV7CK = 0		DV7CK = 1				
		00	$fc/2^{11}$		$fs/2^{3}$		DV9	$fs/2^{3}$	
		01	$fc/2^{7}$		$fc/2^{7}$		DV5	–	
		10	$fc/2^{3}$		$fc/2^{3}$		DV1	–	
		11	External clock (TC1 pin input)						
TC1M	TC1 operating mode select	00: Timer/external trigger timer/event counter mode 01: Window mode 10: Pulse width measurement mode 11: PPG (Programmable pulse generate) output mode							R/W

Note 1: fc: High-frequency clock [Hz], fs: Low-frequency clock [Hz]

Note 2: The timer register consists of two shift registers. A value set in the timer register becomes valid at the rising edge of the first source clock pulse that occurs after the upper byte (TC1DRAH and TC1DRBH) is written. Therefore, write the lower byte and the upper byte in this order (it is recommended to write the register with a 16-bit access instruction). Writing only the lower byte (TC1DRAL and TC1DRBL) does not enable the setting of the timer register.

Note 3: To set the mode, source clock, PPG output control and timer F/F control, write to TC1CR during TC1S=00. Set the timer F/F1 control until the first timer start after setting the PPG mode.

Not Recommended for New Design

Note 4: Auto-capture can be used only in the timer, event counter, and window modes.

Note 5: To set the timer registers, the following relationship must be satisfied.
TC1DRA > TC1DRB > 1 (PPG output mode), TC1DRA > 1 (other modes)

Note 6: Set TFF1 to “0” in the mode except PPG output mode.

Note 7: Set TC1DRB after setting TC1M to the PPG output mode.

Note 8: When the STOP mode is entered, the start control (TC1S) is cleared to “00” automatically, and the timer stops. After the STOP mode is exited, set the TC1S to use the timer counter again.

Note 9: Use the auto-capture function in the operative condition of TC1. A captured value may not be fixed if it's read after the execution of the timer stop or auto-capture disable. Read the capture value in a capture enabled condition.

Note 10: Since the up-counter value is captured into TC1DRB by the source clock of up-counter after setting TC1CR<ACAP1> to "1". Therefore, to read the captured value, wait at least one cycle of the internal source clock before reading TC1DRB for the first time.

Not Recommended for New Design

8.3 Function

TimerCounter 1 has six types of operating modes: timer, external trigger timer, event counter, window, pulse width measurement, programmable pulse generator output modes.

8.3.1 Timer mode

In the timer mode, the up-counter counts up using the internal clock. When a match between the up-counter and the timer register 1A (TC1DRA) value is detected, an INTTC1 interrupt is generated and the up-counter is cleared. After being cleared, the up-counter restarts counting. Setting TC1CR<ACAP1> to “1” captures the up-counter value into the timer register 1B (TC1DRB) with the auto-capture function. Use the auto-capture function in the operative condition of TC1. A captured value may not be fixed if it's read after the execution of the timer stop or auto-capture disable. Read the capture value in a capture enabled condition. Since the up-counter value is captured into TC1DRB by the source clock of up-counter after setting TC1CR<ACAP1> to "1". Therefore, to read the captured value, wait at least one cycle of the internal source clock before reading TC1DRB for the first time.

Table 8-1 Internal Source Clock for TimerCounter 1 (Example: fc = 16 MHz, fs = 32.768 kHz)

TC1CK	NORMAL1/2, IDLE1/2 mode				SLOW, SLEEP mode	
	DV7CK = 0		DV7CK = 1			
	Resolution [μs]	Maximum Time Setting [s]	Resolution [μs]	Maximum Time Setting [s]	Resolution [μs]	Maximum Time Setting [s]
00	128	8.39	244.14	16.0	244.14	16.0
01	8.0	0.524	8.0	0.524	–	–
10	0.5	32.77 m	0.5	32.77 m	–	–

Example 1 :Setting the timer mode with source clock $fc/2^{11}$ [Hz] and generating an interrupt 1 second later (fc = 16 MHz, TBTCR<DV7CK> = “0”)

```
LDW     (TC1DRA), 1E84H     ; Sets the timer register (1 s ÷ 2^11/fc = 1E84H)
DI                          ; IMF= “0”
SET     (EIRL). 7           ; Enables INTTC1
EI                          ; IMF= “1”
LD      (TC1CR), 00000000B  ; Selects the source clock and mode
LD      (TC1CR), 00010000B  ; Starts TC1
```

Example 2 :Auto-capture

```
LD      (TC1CR), 01010000B  ; ACAP1 ← 1
:       :
LD      WA, (TC1DRB)        ; Reads the capture value
```

Note: Since the up-counter value is captured into TC1DRB by the source clock of up-counter after setting TC1CR<ACAP1> to "1". Therefore, to read the captured value, wait at least one cycle of the internal source clock before reading TC1DRB for the first time.

Not Recommended for New Design

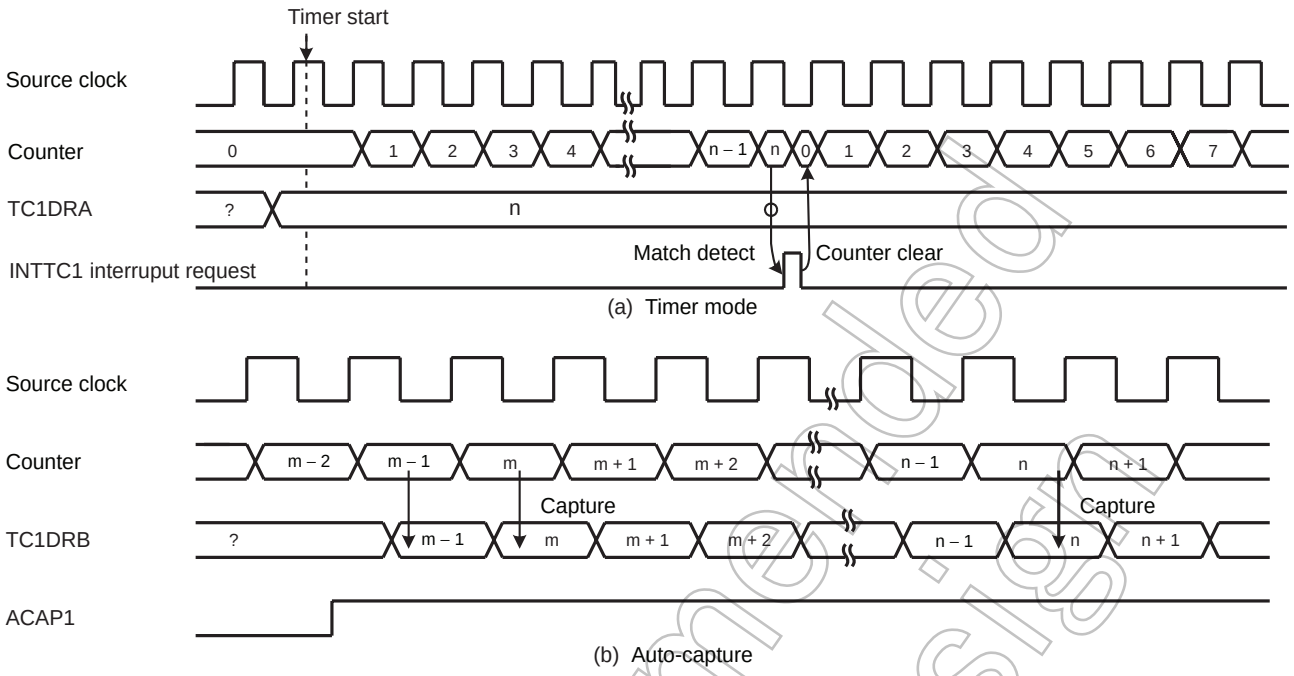

Figure 8-2 Timer Mode Timing Chart

Not Recommended for New Design

8.3.2 External Trigger Timer Mode

In the external trigger timer mode, the up-counter starts counting by the input pulse triggering of the TC1 pin, and counts up at the edge of the internal clock. For the trigger edge used to start counting, either the rising or falling edge is defined in TC1CR<TC1S>.

- When TC1CR<METT1> is set to "1" (trigger start and stop)

  When a match between the up-counter and the TC1DRA value is detected after the timer starts, the up-counter is cleared and halted and an INTTC1 interrupt request is generated.

  If the edge opposite to trigger edge is detected before detecting a match between the up-counter and the TC1DRA, the up-counter is cleared and halted without generating an interrupt request. Therefore, this mode can be used to detect exceeding the specified pulse by interrupt.

  After being halted, the up-counter restarts counting when the trigger edge is detected.

- When TC1CR<METT1> is set to "0" (trigger start)

  When a match between the up-counter and the TC1DRA value is detected after the timer starts, the up-counter is cleared and halted and an INTTC1 interrupt request is generated.

  The edge opposite to the trigger edge has no effect in count up. The trigger edge for the next counting is ignored if detecting it before detecting a match between the up-counter and the TC1DRA.

Since the TC1 pin input has the noise rejection, pulses of 4/fc [s] or less are rejected as noise. A pulse width of 12/fc [s] or more is required to ensure edge detection. The rejection circuit is turned off in the SLOW1/2 or SLEEP1/2 mode, but a pulse width of one machine cycle or more is required.

Example 1 :Generating an interrupt 1 ms after the rising edge of the input pulse to the TC1 pin (fc =16 MHz)

```
LDW     (TC1DRA), 007DH      ; 1ms ÷ 2^7/fc = 7DH
DI                           ; IMF= "0"
SET     (EIRL). 7            ; Enables INTTC1 interrupt
EI                           ; IMF= "1"
LD      (TC1CR), 00000100B   ; Selects the source clock and mode
LD      (TC1CR), 00100100B   ; Starts TC1 external trigger, METT1 = 0
```

Example 2 :Generating an interrupt when the low-level pulse with 4 ms or more width is input to the TC1 pin (fc =16 MHz)

```
LDW     (TC1DRA), 01F4H      ; 4 ms ÷ 2^7/fc = 1F4H
DI                           ; IMF= "0"
SET     (EIRL). 7            ; Enables INTTC1 interrupt
EI                           ; IMF= "1"
LD      (TC1CR), 00000100B   ; Selects the source clock and mode
LD      (TC1CR), 01110100B   ; Starts TC1 external trigger, METT1 = 1
```

Not Recommended for New Design

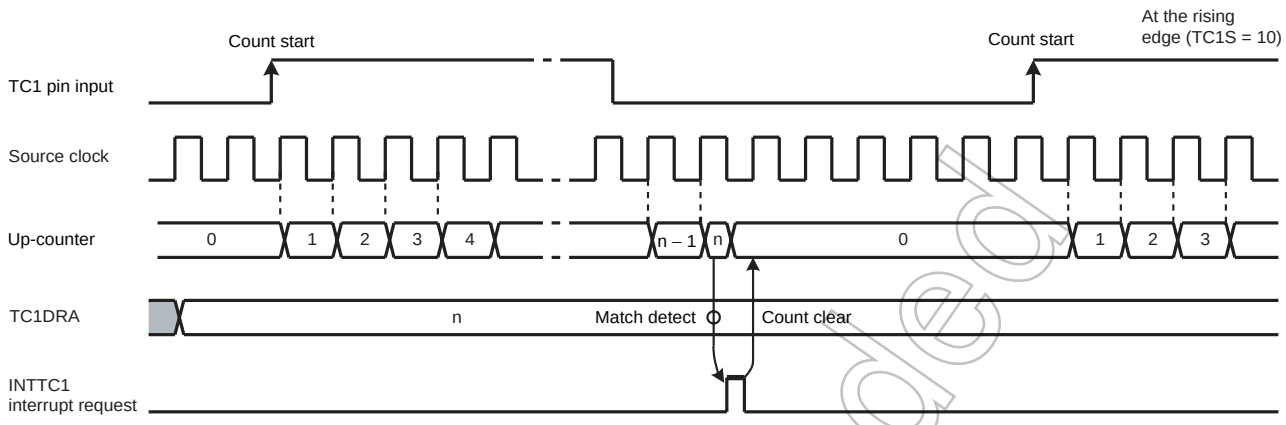

(a) Trigger start (METT1 = 0)

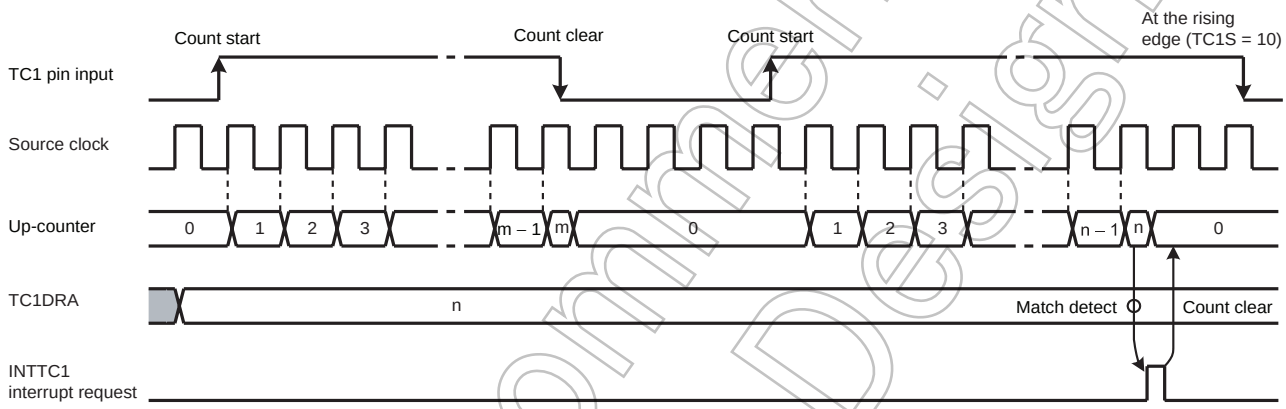

Note: m < n

(b) Trigger start and stop (METT1 = 1)

Figure 8-3 External Trigger Timer Mode Timing Chart

Not Recommended for New Design

8.3.3 Event Counter Mode

In the event counter mode, the up-counter counts up at the edge of the input pulse to the TC1 pin. Either the rising or falling edge of the input pulse is selected as the count up edge in TC1CR<TC1S>.

When a match between the up-counter and the TC1DRA value is detected, an INTTC1 interrupt is generated and the up-counter is cleared. After being cleared, the up-counter restarts counting at each edge of the input pulse to the TC1 pin. Since a match between the up-counter and the value set to TC1DRA is detected at the edge opposite to the selected edge, an INTTC1 interrupt request is generated after a match of the value at the edge opposite to the selected edge.

Two or more machine cycles are required for the low-or high-level pulse input to the TC1 pin.

Setting TC1CR<ACAP1> to “1” captures the up-counter value into TC1DRB with the auto capture function. Use the auto-capture function in the operative condition of TC1. A captured value may not be fixed if it's read after the execution of the timer stop or auto-capture disable. Read the capture value in a capture enabled condition. Since the up-counter value is captured into TC1DRB by the source clock of up-counter after setting TC1CR<ACAP1> to "1". Therefore, to read the captured value, wait at least one cycle of the internal source clock before reading TC1DRB for the first time.

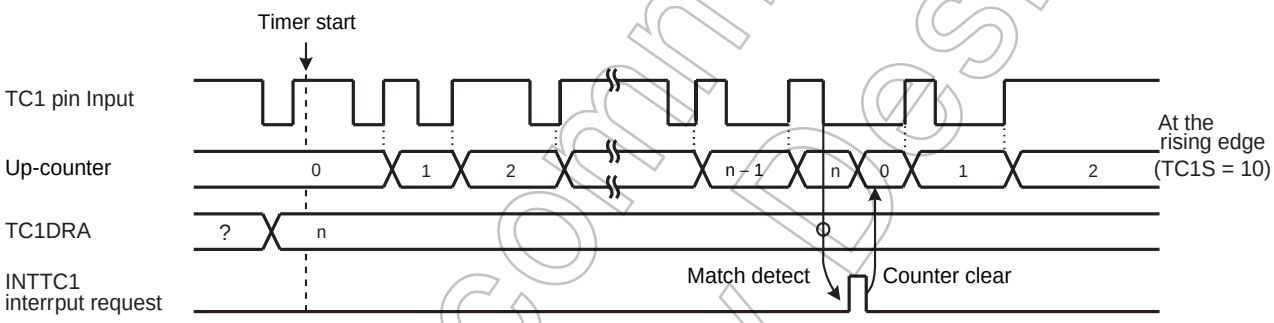

Figure 8-4 Event Counter Mode Timing Chart

Table 8-2 Input Pulse Width to TC1 Pin

	Minimum Pulse Width [s]	
	NORMAL1/2, IDLE1/2 Mode	SLOW1/2, SLEEP1/2 Mode
High-going	2^3/fc	2^3/fs
Low-going	2^3/fc	2^3/fs

Not Recommended for New Design

8.3.4 Window Mode

In the window mode, the up-counter counts up at the rising edge of the pulse that is logical ANDed product of the input pulse to the TC1 pin (window pulse) and the internal source clock. Either the positive logic (count up during high-going pulse) or negative logic (count up during low-going pulse) can be selected.

When a match between the up-counter and the TC1DRA value is detected, an INTTC1 interrupt is generated and the up-counter is cleared.

Define the window pulse to the frequency which is sufficiently lower than the internal source clock programmed with TC1CR<TC1CK>.

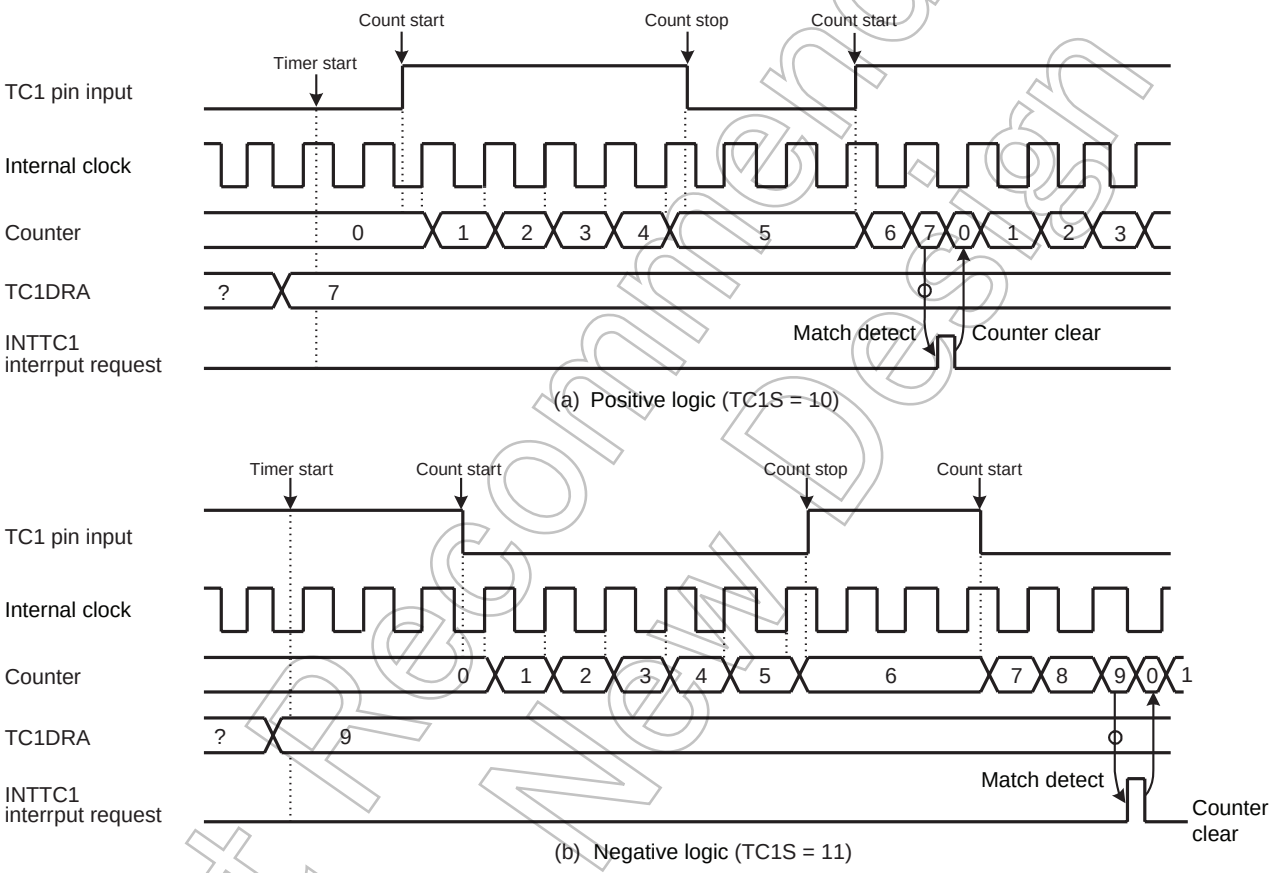

Figure 8-5 Window Mode Timing Chart

Not Recommended for New Design

8.3.5 Pulse Width Measurement Mode

In the pulse width measurement mode, the up-counter starts counting by the input pulse triggering of the TC1 pin, and counts up at the edge of the internal clock. Either the rising or falling edge of the internal clock is selected as the trigger edge in TC1CR<TC1S>. Either the single- or double-edge capture is selected as the trigger edge in TC1CR<MCAP1>.

- When TC1CR<MCAP1> is set to “1” (single-edge capture)

  Either high- or low-level input pulse width can be measured. To measure the high-level input pulse width, set the rising edge to TC1CR<TC1S>. To measure the low-level input pulse width, set the falling edge to TC1CR<TC1S>.

  When detecting the edge opposite to the trigger edge used to start counting after the timer starts, the up-counter captures the up-counter value into TC1DRB and generates an INTTC1 interrupt request. The up-counter is cleared at this time, and then restarts counting when detecting the trigger edge used to start counting.

- When TC1CR<MCAP1> is set to “0” (double-edge capture)

  The cycle starting with either the high- or low-going input pulse can be measured. To measure the cycle starting with the high-going pulse, set the rising edge to TC1CR<TC1S>. To measure the cycle starting with the low-going pulse, set the falling edge to TC1CR<TC1S>.

  When detecting the edge opposite to the trigger edge used to start counting after the timer starts, the up-counter captures the up-counter value into TC1DRB and generates an INTTC1 interrupt request. The up-counter continues counting up, and captures the up-counter value into TC1DRB and generates an INTTC1 interrupt request when detecting the trigger edge used to start counting. The up-counter is cleared at this time, and then continues counting.

Note 1: The captured value must be read from TC1DRB until the next trigger edge is detected. If not read, the captured value becomes a don’t care. It is recommended to use a 16-bit access instruction to read the captured value from TC1DRB.

Note 2: For the single-edge capture, the counter after capturing the value stops at “1” until detecting the next edge. Therefore, the second captured value is “1” larger than the captured value immediately after counting starts.

Note 3: The first captured value after the timer starts may be read incorrectively, therefore, ignore the first captured value.

Not Recommended for New Design

Example :Duty measurement (resolution fc/2^7 [Hz])

```
                CLR     (INTTC1SW). 0       ; INTTC1 service switch initial setting
                                              Address set to convert INTTC1SW at each INTTC1
                LD      (TC1CR), 00000110B  ; Sets the TC1 mode and source clock
                DI                          ; IMF= "0"
                SET     (EIRL). 7           ; Enables INTTC1
                EI                          ; IMF= "1"
                LD      (TC1CR), 00100110B  ; Starts TC1 with an external trigger at MCAP1 = 0
                :
PINTTC1:        CPL     (INTTC1SW). 0       ; INTTC1 interrupt, inverts and tests INTTC1 service switch
                JRS     F, SINTTC1
                LD      A, (TC1DRBL)        ; Reads TC1DRB (High-level pulse width)
                LD      W,(TC1DRBH)
                LD      (HPULSE), WA        ; Stores high-level pulse width in RAM
                RETI
SINTTC1:        LD      A, (TC1DRBL)        ; Reads TC1DRB (Cycle)
                LD      W,(TC1DRBH)
                LD      (WIDTH), WA         ; Stores cycle in RAM
                :
                RETI                        ; Duty calculation
                :
VINTTC1:        DW      PINTTC1             ; INTTC1 Interrupt vector
```

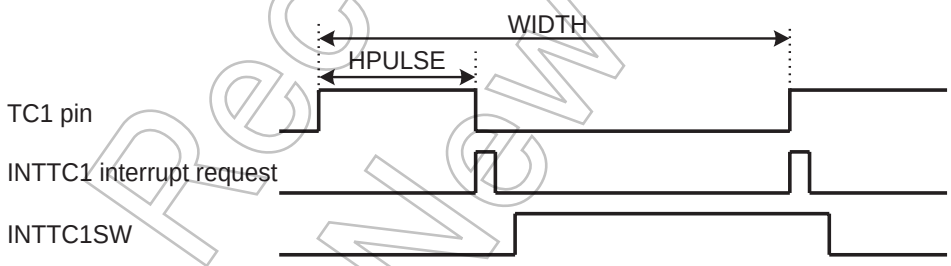

Not Recommended for New Design

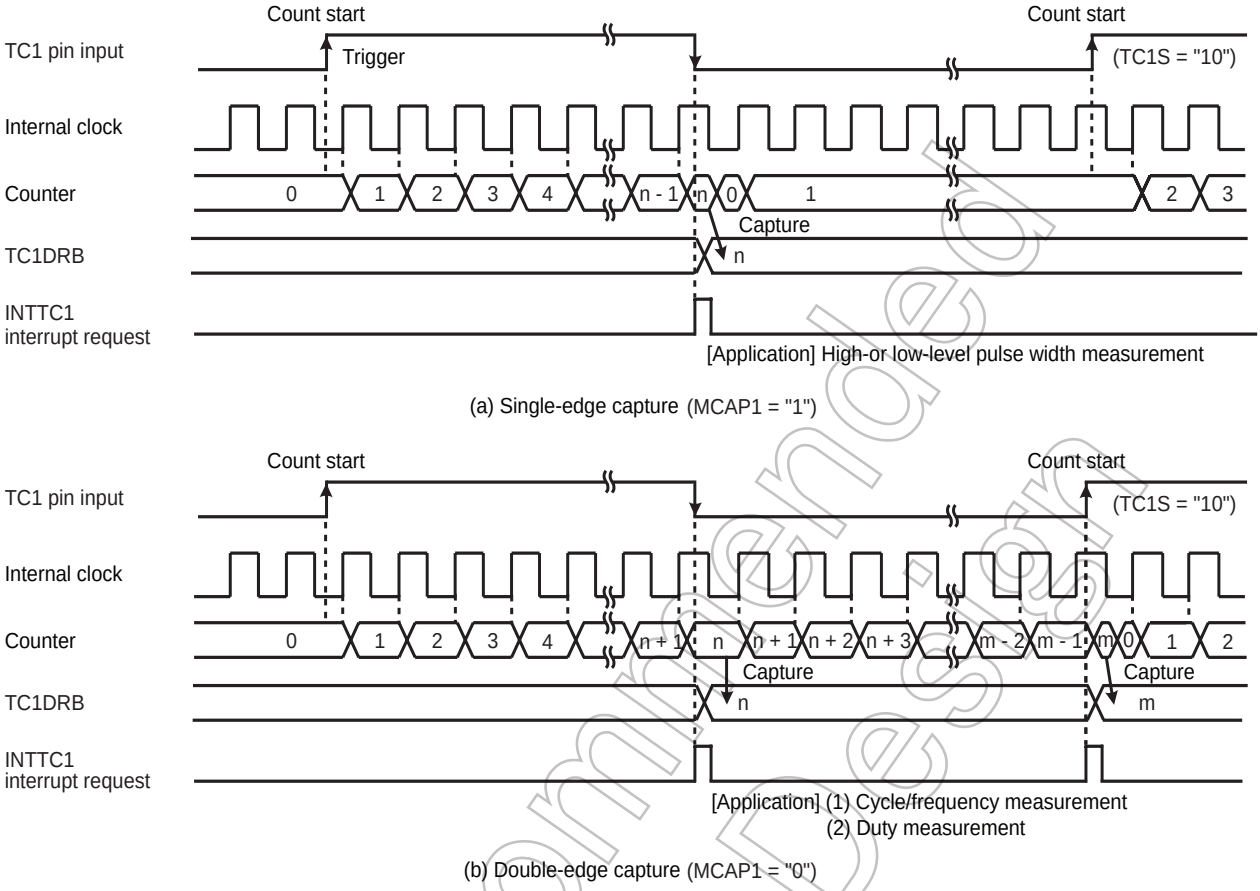

Figure 8-6 Pulse Width Measurement Mode

Not Recommended for New Design

8.3.6 Programmable Pulse Generate (PPG) Output Mode

In the programmable pulse generation (PPG) mode, an arbitrary duty pulse is generated by counting performed in the internal clock. To start the timer, TC1CR<TC1S> specifies either the edge of the input pulse to the TC1 pin or the command start. TC1CR<MPPG1> specifies whether a duty pulse is produced continuously or not (one-shot pulse).

- When TC1CR<MPPG1> is set to “0” (Continuous pulse generation)

  When a match between the up-counter and the TC1DRB value is detected after the timer starts, the level of the $\overline{PPG}$ pin is inverted and an INTTC1 interrupt request is generated. The up-counter continues counting. When a match between the up-counter and the TC1DRA value is detected, the level of the $\overline{PPG}$ pin is inverted and an INTTC1 interrupt request is generated. The up-counter is cleared at this time, and then continues counting and pulse generation.

  When TC1S is cleared to “00” during PPG output, the $\overline{PPG}$ pin retains the level immediately before the counter stops.

- When TC1CR<MPPG1> is set to “1” (One-shot pulse generation)

  When a match between the up-counter and the TC1DRB value is detected after the timer starts, the level of the $\overline{PPG}$ pin is inverted and an INTTC1 interrupt request is generated. The up-counter continues counting. When a match between the up-counter and the TC1DRA value is detected, the level of the $\overline{PPG}$ pin is inverted and an INTTC1 interrupt request is generated. TC1CR<TC1S> is cleared to “00” automatically at this time, and the timer stops. The pulse generated by PPG retains the same level as that when the timer stops.

Since the output level of the $\overline{PPG}$ pin can be set with TC1CR<TFF1> when the timer starts, a positive or negative pulse can be generated. Since the inverted level of the timer F/F1 output level is output to the $\overline{PPG}$ pin, specify TC1CR<TFF1> to “0” to set the high level to the $\overline{PPG}$ pin, and “1” to set the low level to the $\overline{PPG}$ pin. Upon reset, the timer F/F1 is initialized to “0”.

Note 1: To change TC1DRA or TC1DRB during a run of the timer, set a value sufficiently larger than the count value of the counter. Setting a value smaller than the count value of the counter during a run of the timer may generate a pulse different from that specified.

Note 2: Do not change TC1CR<TFF1> during a run of the timer. TC1CR<TFF1> can be set correctly only at initialization (after reset). When the timer stops during PPG, TC1CR<TFF1> can not be set correctly from this point onward if the PPG output has the level which is inverted of the level when the timer starts. (Setting TC1CR<TFF1> specifies the timer F/F1 to the level inverted of the programmed value.) Therefore, the timer F/F1 needs to be initialized to ensure an arbitrary level of the PPG output. To initialize the timer F/F1, change TC1CR<TC1M> to the timer mode (it is not required to start the timer mode), and then set the PPG mode. Set TC1CR<TFF1> at this time.

Note 3: In the PPG mode, the following relationship must be satisfied.
TC1DRA > TC1DRB

Note 4: Set TC1DRB after changing the mode of TC1M to the PPG mode.

Not Recommended for New Design

Example :Generating a pulse which is high-going for 800 μs and low-going for 200 μs
(fc = 16 MHz)

```
                Setting port
LD              (TC1CR), 10000111B      ; Sets the PPG mode, selects the source clock
LDW             (TC1DRA), 007DH         ; Sets the cycle (1 ms ÷ 2^7/fc ms = 007DH)
LDW             (TC1DRB), 0019H         ; Sets the low-level pulse width (200 μs ÷ 2^7/fc = 0019H)
LD              (TC1CR), 10010111B      ; Starts the timer
```

Example :After stopping PPG, setting the PPG pin to a high-level to restart PPG
(fc = 16 MHz)

```
                Setting port
LD              (TC1CR), 10000111B      ; Sets the PPG mode, selects the source clock
LDW             (TC1DRA), 007DH         ; Sets the cycle (1 ms ÷ 2^7/fc μs = 007DH)
LDW             (TC1DRB), 0019H         ; Sets the low-level pulse width (200 μs ÷ 2^7/fc = 0019H)
LD              (TC1CR), 10010111B      ; Starts the timer
:               :
LD              (TC1CR), 10000111B      ; Stops the timer
LD              (TC1CR), 10000100B      ; Sets the timer mode
LD              (TC1CR), 00000111B      ; Sets the PPG mode, TFF1 = 0
LD              (TC1CR), 00010111B      ; Starts the timer
```

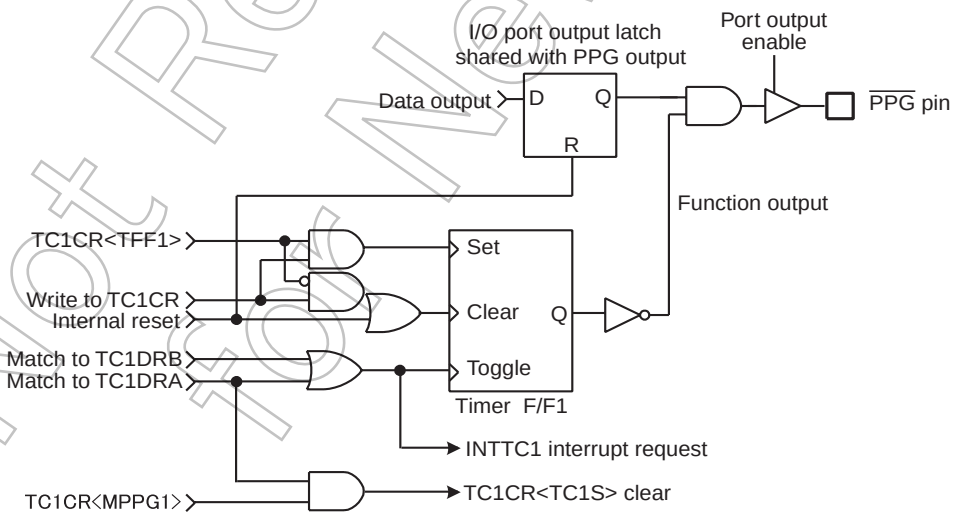

Figure 8-7 $\overline{\text{PPG}}$ Output

Not Recommended for New Design

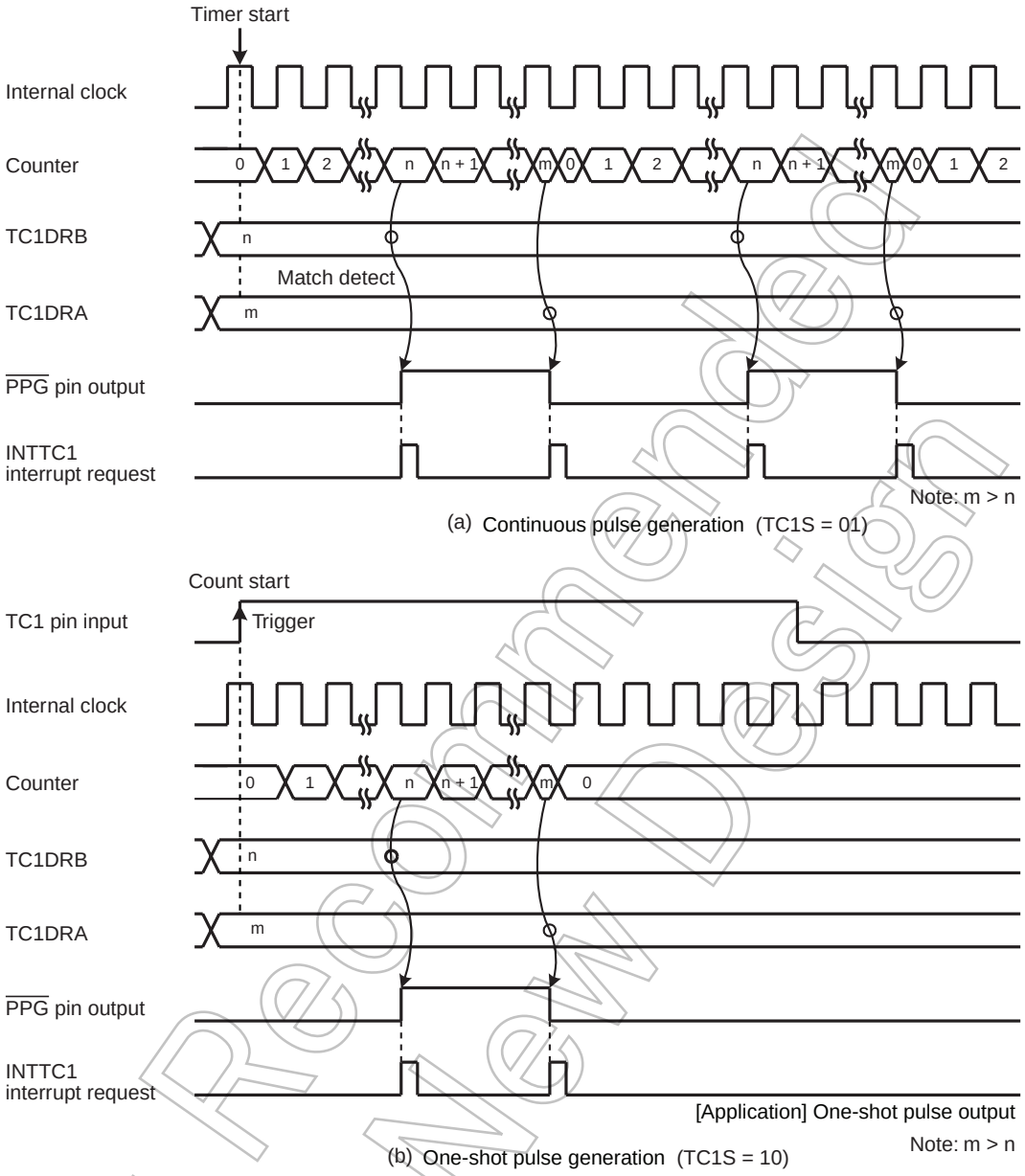

Figure 8-8 PPG Mode Timing Chart

Not Recommended for New Design

Not Recommended for New Design

9. 8-Bit TimerCounter (TC3, TC4)

9.1 Configuration

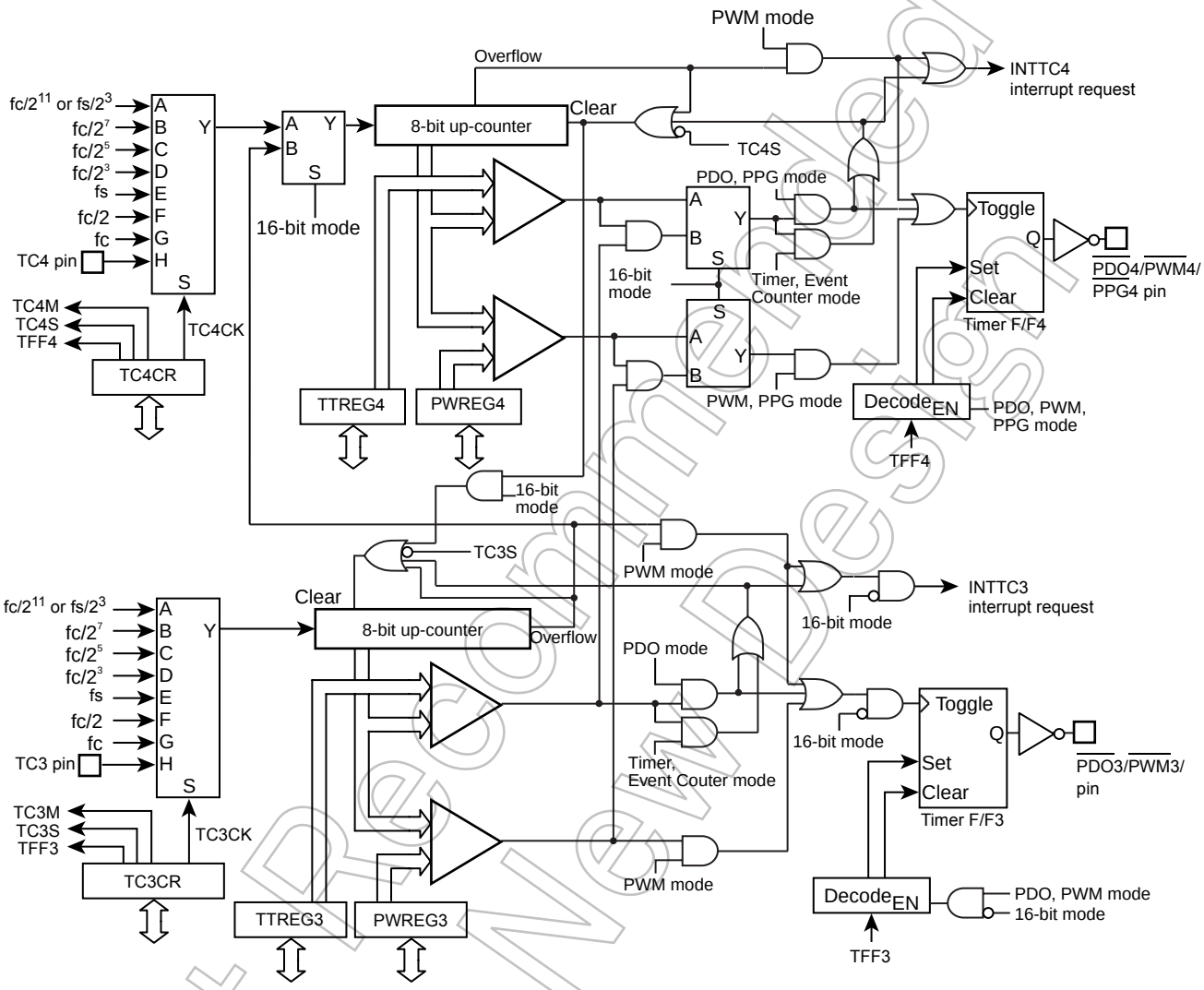

Figure 9-1 8-Bit TimerCounter 3, 4

Not Recommended for New Design

9.2 TimerCounter Control

The TimerCounter 3 is controlled by the TimerCounter 3 control register (TC3CR) and two 8-bit timer registers (TTREG3, PWREG3).

TimerCounter 3 Timer Register

TTREG3 (001CH) R/W	7	6	5	4	3	2	1	0	
									(Initial value: 1111 1111)

PWREG3 (001EH) R/W	7	6	5	4	3	2	1	0	
									(Initial value: 1111 1111)

Note 1: Do not change the timer register (TTREG3) setting while the timer is running.

Note 2: Do not change the timer register (PWREG3) setting in the operating mode except the 8-bit and 16-bit PWM modes while the timer is running.

TimerCounter 3 Control Register

TC3CR (001AH)	7	6	5	4	3	2	1	0	
	TFF3	TC3CK			TC3S	TC3M			(Initial value: 0000 0000)

TFF3	Time F/F3 control	0: Clear 1: Set			R/W
TC3CK	Operating clock selection [Hz]		NORMAL1/2, IDLE1/2 mode	SLOW1/2 SLEEP1/2 mode	R/W
			DV7CK = 0	DV7CK = 1	
		000	$fc/2^{11}$	$fs/2^3$	$fs/2^3$
		001	$fc/2^7$	$fc/2^7$	–
		010	$fc/2^5$	$fc/2^5$	–
		011	$fc/2^3$	$fc/2^3$	–
		100	fs	fs	fs
		101	fc/2	fc/2	–
		110	fc	fc	fc (Note 8)
		111	TC3 pin input		
TC3S	TC3 start control	0: Operation stop and counter clear 1: Operation start			R/W
TC3M	TC3M operating mode select	000: 8-bit timer/event counter mode 001: 8-bit programmable divider output (PDO) mode 010: 8-bit pulse width modulation (PWM) output mode 011: 16-bit mode (Each mode is selectable with TC4M.) 1**: Reserved			R/W

Note 1: fc: High-frequency clock [Hz] fs: Low-frequency clock[Hz]

Note 2: Do not change the TC3M, TC3CK and TFF3 settings while the timer is running.

Note 3: To stop the timer operation (TC3S= 1 → 0), do not change the TC3M, TC3CK and TFF3 settings. To start the timer operation (TC3S= 0 → 1), TC3M, TC3CK and TFF3 can be programmed.

Note 4: To use the TimerCounter in the 16-bit mode, set the operating mode by programming TC4CR<TC4M>, where TC3M must be fixed to 011.

Note 5: To use the TimerCounter in the 16-bit mode, select the source clock by programming TC3CK. Set the timer start control and timer F/F control by programming TC4CR<TC4S> and TC4CR<TFF4>, respectively.

Note 6: The operating clock settings are limited depending on the timer operating mode. For the detailed descriptions, see Table 9-1 and Table 9-2.

Not Recommended for New Design

Note 7: The timer register settings are limited depending on the timer operating mode. For the detailed descriptions, see Table 9-3.

Note 8: The operating clock fc in the SLOW or SLEEP mode can be used only as the high-frequency warm-up mode.

Not Recommended for New Design

The TimerCounter 4 is controlled by the TimerCounter 4 control register (TC4CR) and two 8-bit timer registers (TTREG4 and PWREG4).

TimerCounter 4 Timer Register

TTREG4 (001DH) R/W	7	6	5	4	3	2	1	0	
									(Initial value: 1111 1111)

PWREG4 (001FH) R/W	7	6	5	4	3	2	1	0	
									(Initial value: 1111 1111)

Note 1: Do not change the timer register (TTREG4) setting while the timer is running.

Note 2: Do not change the timer register (PWREG4) setting in the operating mode except the 8-bit and 16-bit PWM modes while the timer is running.

TimerCounter 4 Control Register

TC4CR (001BH)	7	6	5	4	3	2	1	0	
	TFF4	TC4CK			TC4S	TC4M			(Initial value: 0000 0000)

TFF4	Timer F/F4 control	0: Clear 1: Set			R/W
TC4CK	Operating clock selection [Hz]		NORMAL1/2, IDLE1/2 mode	SLOW1/2 SLEEP1/2 mode	R/W
			DV7CK = 0	DV7CK = 1	
		000	$fc/2^{11}$	$fs/2^3$	$fs/2^3$
		001	$fc/2^7$	$fc/2^7$	–
		010	$fc/2^5$	$fc/2^5$	–
		011	$fc/2^3$	$fc/2^3$	–
		100	fs	fs	fs
		101	fc/2	fc/2	–
		110	fc	fc	–
		111	TC4 pin input		
TC4S	TC4 start control	0: Operation stop and counter clear 1: Operation start			R/W
TC4M	TC4M operating mode select	000: 8-bit timer/event counter mode 001: 8-bit programmable divider output (PDO) mode 010: 8-bit pulse width modulation (PWM) output mode 011: Reserved 100: 16-bit timer/event counter mode 101: Warm-up counter mode 110: 16-bit pulse width modulation (PWM) output mode 111: 16-bit PPG mode			R/W

Note 1: fc: High-frequency clock [Hz] fs: Low-frequency clock [Hz]

Note 2: Do not change the TC4M, TC4CK and TFF4 settings while the timer is running.

Note 3: To stop the timer operation (TC4S= 1 → 0), do not change the TC4M, TC4CK and TFF4 settings.
To start the timer operation (TC4S= 0 → 1), TC4M, TC4CK and TFF4 can be programmed.

Note 4: When TC4M= 1** (upper byte in the 16-bit mode), the source clock becomes the TC3 overflow signal regardless of the TC4CK setting.

Note 5: To use the TimerCounter in the 16-bit mode, select the operating mode by programming TC4M, where TC3CR<TC3M> must be set to 011.

Not Recommended for New Design

Note 6: To the TimerCounter in the 16-bit mode, select the source clock by programming TC3CR<TC3CK>. Set the timer start control and timer F/F control by programming TC4S and TFF4, respectively.

Note 7: The operating clock settings are limited depending on the timer operating mode. For the detailed descriptions, see Table 9-1 and Table 9-2.

Note 8: The timer register settings are limited depending on the timer operating mode. For the detailed descriptions, see Table 9-3.

Table 9-1 Operating Mode and Selectable Source Clock (NORMAL1/2 and IDLE1/2 Modes)

Operating mode	$fc/2^{11}$ or $fs/2^3$	$fc/2^7$	$fc/2^5$	$fc/2^3$	fs	fc/2	fc	TC3 pin input	TC4 pin input
8-bit timer	O	O	O	O	–	–	–	–	–
8-bit event counter	–	–	–	–	–	–	–	O	O
8-bit PDO	O	O	O	O	–	–	–	–	–
8-bit PWM	O	O	O	O	O	O	O	–	–
16-bit timer	O	O	O	O	–	–	–	–	–
16-bit event counter	–	–	–	–	–	–	–	O	–
Warm-up counter	–	–	–	–	O	–	–	–	–
16-bit PWM	O	O	O	O	O	O	O	O	–
16-bit PPG	O	O	O	O	–	–	–	O	–

Note 1: For 16-bit operations (16-bit timer/event counter, warm-up counter, 16-bit PWM and 16-bit PPG), set its source clock on lower bit (TC3CK).

Note 2: O : Available source clock

Table 9-2 Operating Mode and Selectable Source Clock (SLOW1/2 and SLEEP1/2 Modes)

Operating mode	$fc/2^{11}$ or $fs/2^3$	$fc/2^7$	$fc/2^5$	$fc/2^3$	fs	fc/2	fc	TC3 pin input	TC4 pin input
8-bit timer	O	–	–	–	–	–	–	–	–
8-bit event counter	–	–	–	–	–	–	–	O	O
8-bit PDO	O	–	–	–	–	–	–	–	–
8-bit PWM	O	–	–	–	O	–	–	–	–
16-bit timer	O	–	–	–	–	–	–	–	–
16-bit event counter	–	–	–	–	–	–	–	O	–
Warm-up counter	–	–	–	–	–	–	O	–	–
16-bit PWM	O	–	–	–	O	–	–	O	–
16-bit PPG	O	–	–	–	–	–	–	O	–

Note1: For 16-bit operations (16-bit timer/event counter, warm-up counter, 16-bit PWM and 16-bit PPG), set its source clock on lower bit (TC3CK).

Note2: O : Available source clock

Not Recommended for New Design

Table 9-3 Constraints on Register Values Being Compared

Operating mode	Register Value
8-bit timer/event counter	1≤ (TTREGn) ≤255
8-bit PDO	1≤ (TTREGn) ≤255
8-bit PWM	2≤ (PWREGn) ≤254
16-bit timer/event counter	1≤ (TTREG4, 3) ≤65535
Warm-up counter	256≤ (TTREG4, 3) ≤65535
16-bit PWM	2≤ (PWREG4, 3) ≤65534
16-bit PPG	1≤ (PWREG4, 3) < (TTREG4, 3) ≤65535 and (PWREG4, 3) + 1 < (TTREG4, 3)

Note: n = 3 to 4

Not Recommended for New Design

9.3 Function

The TimerCounter 3 and 4 have the 8-bit timer, 8-bit event counter, 8-bit programmable divider output (PDO), 8-bit pulse width modulation (PWM) output modes. The TimerCounter 3 and 4 (TC3, 4) are cascadable to form a 16-bit timer. The 16-bit timer has the operating modes such as the 16-bit timer, 16-bit event counter, warm-up counter, 16-bit pulse width modulation (PWM) output and 16-bit programmable pulse generation (PPG) modes.

9.3.1 8-Bit Timer Mode (TC3 and 4)

In the timer mode, the up-counter counts up using the internal clock. When a match between the up-counter and the timer register j (TTREGj) value is detected, an INTTCj interrupt is generated and the up-counter is cleared. After being cleared, the up-counter restarts counting.

Note 1: In the timer mode, fix TCjCR<TFFj> to 0. If not fixed, the $\overline{PDOj}$, $\overline{PWMj}$ and $\overline{PPGj}$ pins may output pulses.

Note 2: In the timer mode, do not change the TTREGj setting while the timer is running. Since TTREGj is not in the shift register configuration in the timer mode, the new value programmed in TTREGj is in effect immediately after the programming. Therefore, if TTREGi is changed while the timer is running, an expected operation may not be obtained.

Note 3: j = 3, 4

Table 9-4 Source Clock for TimerCounter 3, 4 (Internal Clock)

Source Clock			Resolution		Maximum Time Setting	
NORMAL1/2, IDLE1/2 mode		SLOW1/2, SLEEP1/2 mode	fc = 16 MHz	fs = 32.768 kHz	fc = 16 MHz	fs = 32.768 kHz
DV7CK = 0	DV7CK = 1					
$fc/2^{11}$ [Hz]	$fs/2^3$ [Hz]	$fs/2^3$ [Hz]	128 μs	244.14 μs	32.6 ms	62.3 ms
$fc/2^7$	$fc/2^7$	–	8 μs	–	2.0 ms	–
$fc/2^5$	$fc/2^5$	–	2 μs	–	510 μs	–
$fc/2^3$	$fc/2^3$	–	500 ns	–	127.5 μs	–

Example :Setting the timer mode with source clock $fc/2^7$ Hz and generating an interrupt 80 μs later (TimerCounter4, fc = 16.0 MHz)

```
LD      (TTREG4), 0AH        : Sets the timer register (80 μs÷2^7/fc = 0AH).
DI
SET     (EIRH), 3            : Enables INTTC4 interrupt.
EI
LD      (TC4CR), 00010000B   : Sets the operating clock to fc/2^7, and 8-bit timer mode.
LD      (TC4CR), 00011000B   : Starts TC4.
```

Not Recommended for New Design

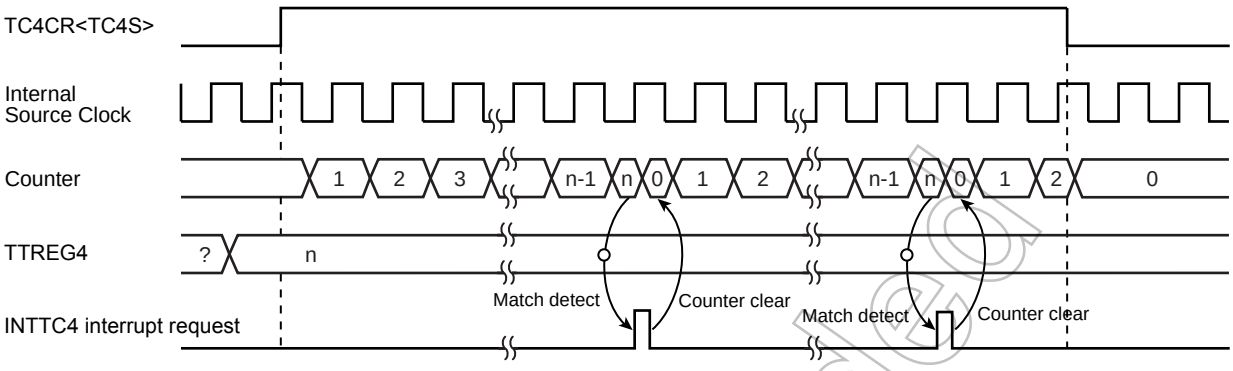

Figure 9-2 8-Bit Timer Mode Timing Chart (TC4)

9.3.2 8-Bit Event Counter Mode (TC3, 4)

In the 8-bit event counter mode, the up-counter counts up at the falling edge of the input pulse to the TCj pin. When a match between the up-counter and the TTREGj value is detected, an INTTCj interrupt is generated and the up-counter is cleared. After being cleared, the up-counter restarts counting at the falling edge of the input pulse to the TCj pin. Two machine cycles are required for the low- or high-level pulse input to the TCj pin. Therefore, a maximum frequency to be supplied is $fc/2^4$ Hz in the NORMAL1/2 or IDLE1/2 mode, and $fs/2^4$ Hz in the SLOW1/2 or SLEEP1/2 mode.

Note 1: In the event counter mode, fix TCjCR<TFFj> to 0. If not fixed, the $\overline{PDOj}$, PWMj and $\overline{PPGj}$ pins may output pulses.

Note 2: In the event counter mode, do not change the TTREGj setting while the timer is running. Since TTREGj is not in the shift register configuration in the event counter mode, the new value programmed in TTREGj is in effect immediately after the programming. Therefore, if TTREGi is changed while the timer is running, an expected operation may not be obtained.

Note 3: j = 3, 4

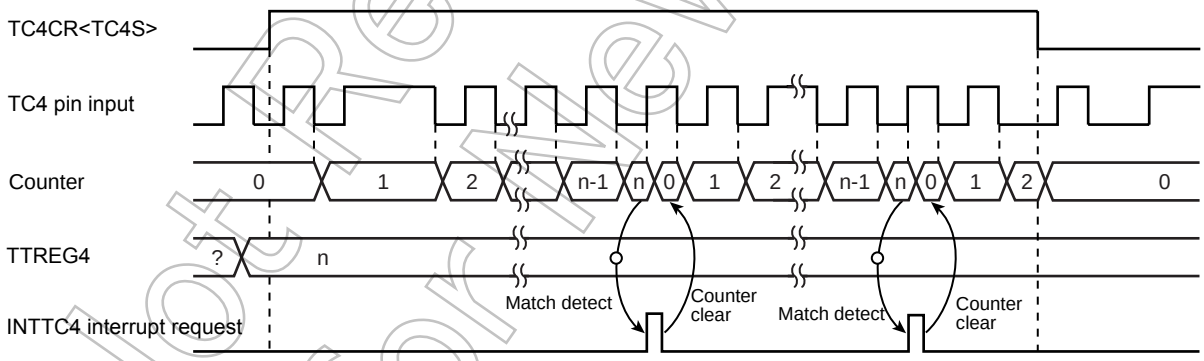

Figure 9-3 8-Bit Event Counter Mode Timing Chart (TC4)

9.3.3 8-Bit Programmable Divider Output (PDO) Mode (TC3, 4)

This mode is used to generate a pulse with a 50% duty cycle from the $\overline{PDOj}$ pin.

In the PDO mode, the up-counter counts up using the internal clock. When a match between the up-counter and the TTREGj value is detected, the logic level output from the $\overline{PDOj}$ pin is switched to the opposite state and the up-counter is cleared. The INTTCj interrupt request is generated at the time. The logic state opposite to the timer F/Fj logic level is output from the $\overline{PDOj}$ pin. An arbitrary value can be set to the timer F/Fj by TCjCR<TFFj>. Upon reset, the timer F/Fj value is initialized to 0.

To use the programmable divider output, set the output latch of the I/O port to 1.

Not Recommended for New Design

Example :Generating 1024 Hz pulse using TC4 (fc = 16.0 MHz)

```
                Setting port
LD      (TTREG4),  3DH          : 1/1024÷2^7/fc÷2 = 3DH
LD      (TC4CR),   00010001B    : Sets the operating clock to fc/2^7, and 8-bit PDO mode.
LD      (TC4CR),  00011001B     : Starts TC4.
```

Note 1: In the programmable divider output mode, do not change the TTREGj setting while the timer is running. Since TTREGj is not in the shift register configuration in the programmable divider output mode, the new value programmed in TTREGj is in effect immediately after programming. Therefore, if TTREGi is changed while the timer is running, an expected operation may not be obtained.

Note 2: When the timer is stopped during PDO output, the $\overline{PDOj}$ pin holds the output status when the timer is stopped. To change the output status, program TCjCR<TFFj> after the timer is stopped. Do not change the TCjCR<TFFj> setting upon stopping of the timer.
Example: Fixing the $\overline{PDOj}$ pin to the high level when the TimerCounter is stopped
CLR (TCjCR).3: Stops the timer.
CLR (TCjCR).7: Sets the $\overline{PDOj}$ pin to the high level.

Note 3: j = 3, 4

Not Recommended for New Design

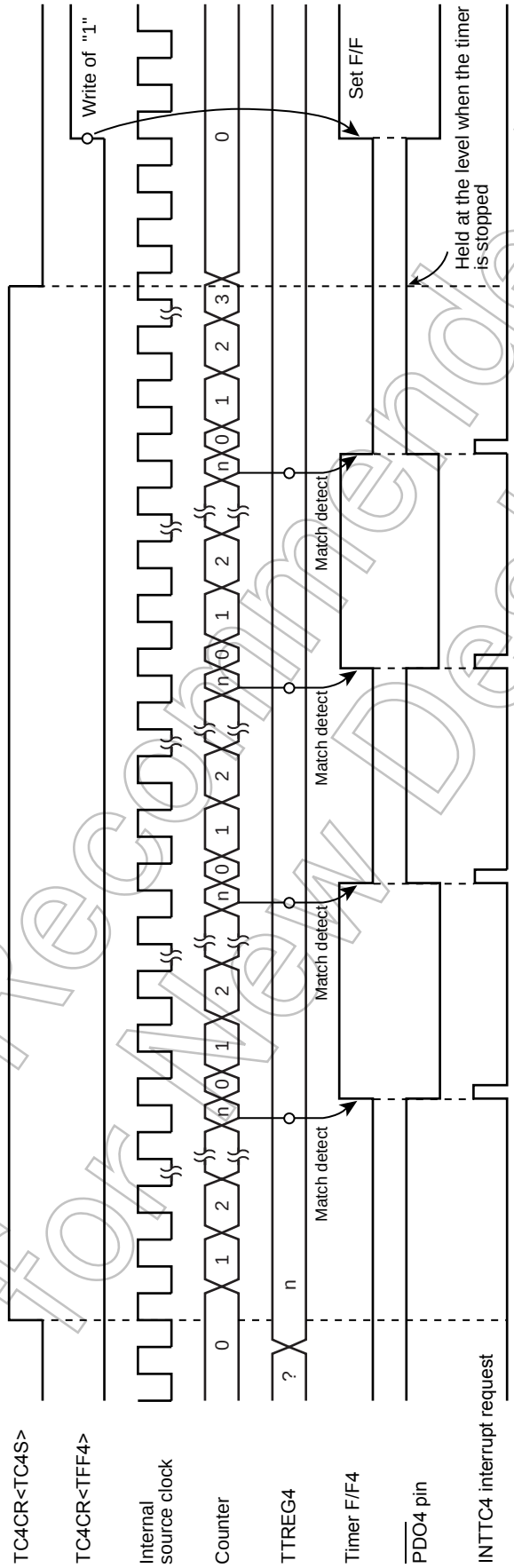

Figure 9-4 8-Bit PDO Mode Timing Chart (TC4)

Not Recommended for New Design

9.3.4 8-Bit Pulse Width Modulation (PWM) Output Mode (TC3, 4)

This mode is used to generate a pulse-width modulated (PWM) signals with up to 8 bits of resolution. The up-counter counts up using the internal clock.

When a match between the up-counter and the PWREGj value is detected, the logic level output from the timer F/Fj is switched to the opposite state. The counter continues counting. The logic level output from the timer F/Fj is switched to the opposite state again by the up-counter overflow, and the counter is cleared. The INTTCj interrupt request is generated at this time.

Since the initial value can be set to the timer F/Fj by TCjCR<TFFj>, positive and negative pulses can be generated. Upon reset, the timer F/Fj is cleared to 0.

(The logic level output from the $\overline{\text{PWMj}}$ pin is the opposite to the timer F/Fj logic level.)

Since PWREGj in the PWM mode is serially connected to the shift register, the value set to PWREGj can be changed while the timer is running. The value set to PWREGj during a run of the timer is shifted by the INTTCj interrupt request and loaded into PWREGj. While the timer is stopped, the value is shifted immediately after the programming of PWREGj. If executing the read instruction to PWREGj during PWM output, the value in the shift register is read, but not the value set in PWREGj. Therefore, after writing to PWREGj, the reading data of PWREGj is previous value until INTTCj is generated.

For the pin used for PWM output, the output latch of the I/O port must be set to 1.

Note 1: In the PWM mode, program the timer register PWREGj immediately after the INTTCj interrupt request is generated (normally in the INTTCj interrupt service routine.) If the programming of PWREGj and the interrupt request occur at the same time, an unstable value is shifted, that may result in generation of the pulse different from the programmed value until the next INTTCj interrupt request is generated.

Note 2: When the timer is stopped during PWM output, the $\overline{\text{PWMj}}$ pin holds the output status when the timer is stopped. To change the output status, program TCjCR<TFFj> after the timer is stopped. Do not change the TCjCR<TFFj> upon stopping of the timer.
Example: Fixing the $\overline{\text{PWMj}}$ pin to the high level when the TimerCounter is stopped
CLR (TCjCR).3: Stops the timer.
CLR (TCjCR).7: Sets the $\overline{\text{PWMj}}$ pin to the high level.

Note 3: To enter the STOP mode during PWM output, stop the timer and then enter the STOP mode. If the STOP mode is entered without stopping the timer when fc, fc/2 or fs is selected as the source clock, a pulse is output from the $\overline{\text{PWMj}}$ pin during the warm-up period time after exiting the STOP mode.

Note 4: j = 3, 4

Table 9-5 PWM Output Mode

Source Clock			Resolution		Repeated Cycle	
NORMAL1/2, IDLE1/2 mode		SLOW1/2, SLEEP1/2 mode	fc = 16 MHz	fs = 32.768 kHz	fc = 16 MHz	fs = 32.768 kHz
DV7CK = 0	DV7CK = 1					
$fc/2^{11}$ [Hz]	$fs/2^3$ [Hz]	$fs/2^3$ [Hz]	128 μs	244.14 μs	32.8 ms	62.5 ms
$fc/2^7$	$fc/2^7$	–	8 μs	–	2.05 ms	–
$fc/2^5$	$fc/2^5$	–	2 μs	–	512 μs	–
$fc/2^3$	$fc/2^3$	–	500 ns	–	128 μs	–
fs	fs	fs	30.5 μs	30.5 μs	7.81 ms	7.81 ms
fc/2	fc/2	–	125 ns	–	32 μs	–
fc	fc	–	62.5 ns	–	16 μs	–

Not Recommended for New Design

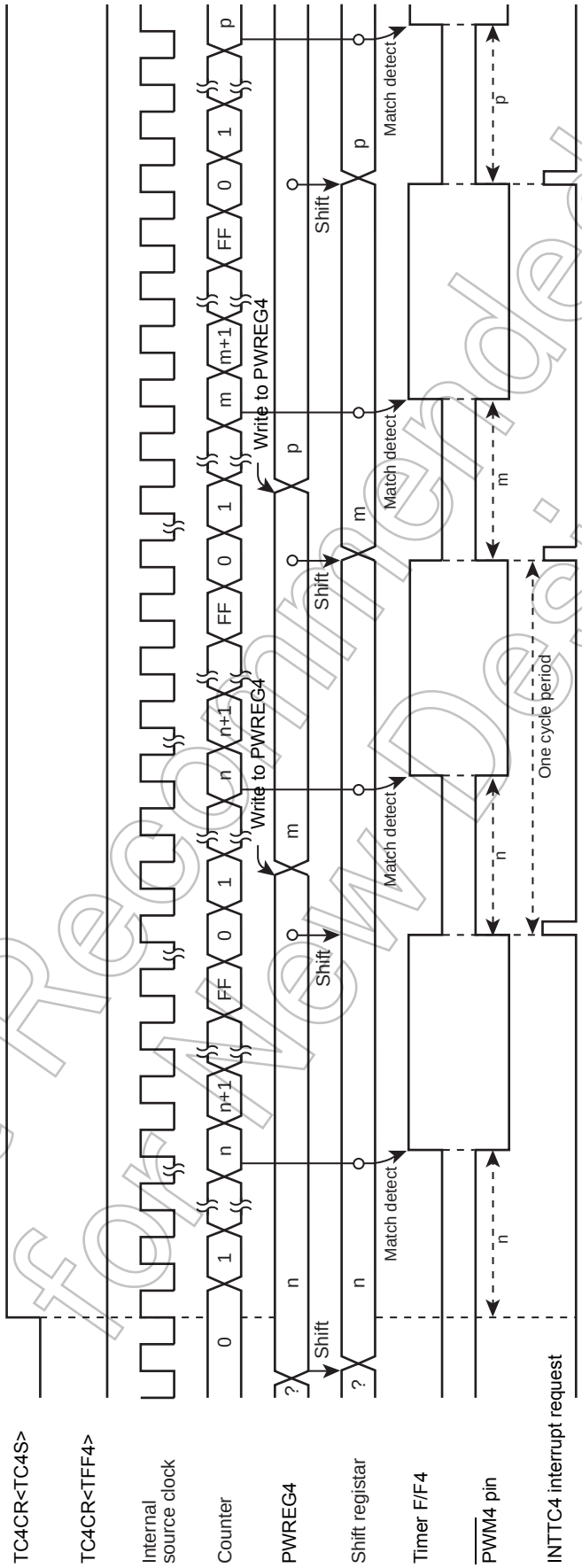

Figure 9-5 8-Bit PWM Mode Timing Chart (TC4)

Not Recommended for New Design

9.3.5 16-Bit Timer Mode (TC3 and 4)

In the timer mode, the up-counter counts up using the internal clock. The TimerCounter 3 and 4 are cascadable to form a 16-bit timer.

When a match between the up-counter and the timer register (TTREG3, TTREG4) value is detected after the timer is started by setting TC4CR<TC4S> to 1, an INTTC4 interrupt is generated and the up-counter is cleared. After being cleared, the up-counter continues counting. Program the lower byte and upper byte in this order in the timer register. (Programming only the upper or lower byte should not be attempted.)

Note 1: In the timer mode, fix TCjCR<TFFj> to 0. If not fixed, the $\overline{PDOj}$, $\overline{PWMj}$, and $\overline{PPGj}$ pins may output a pulse.

Note 2: In the timer mode, do not change the TTREGj setting while the timer is running. Since TTREGj is not in the shift register configuration in the timer mode, the new value programmed in TTREGj is in effect immediately after programming of TTREGj. Therefore, if TTREGj is changed while the timer is running, an expected operation may not be obtained.

Note 3: j = 3, 4

Table 9-6 Source Clock for 16-Bit Timer Mode

Source Clock			Resolution		Maximum Time Setting	
NORMAL1/2, IDLE1/2 mode		SLOW1/2, SLEEP1/2 mode	fc = 16 MHz	fs = 32.768 kHz	fc = 16 MHz	fs = 32.768 kHz
DV7CK = 0	DV7CK = 1					
$fc/2^{11}$	$fs/2^3$	$fs/2^3$	128 μs	244.14 μs	8.39 s	16 s
$fc/2^7$	$fc/2^7$	–	8 μs	–	524.3 ms	–
$fc/2^5$	$fc/2^5$	–	2 μs	–	131.1 ms	–
$fc/2^3$	$fc/2^3$	–	500 ns	–	32.8 ms	–

Example :Setting the timer mode with source clock $fc/2^7$ Hz, and generating an interrupt 300 ms later (fc = 16.0 MHz)

```
LDW   (TTREG3), 927CH    : Sets the timer register (300 ms÷2^7/fc = 927CH).
DI
SET   (EIRH). 3          : Enables INTTC4 interrupt.
EI
LD    (TC3CR), 13H       :Sets the operating clock to fc/2^7, and 16-bit timer mode
                          (lower byte).
LD    (TC4CR), 04H       : Sets the 16-bit timer mode (upper byte).
LD    (TC4CR), 0CH       : Starts the timer.
```

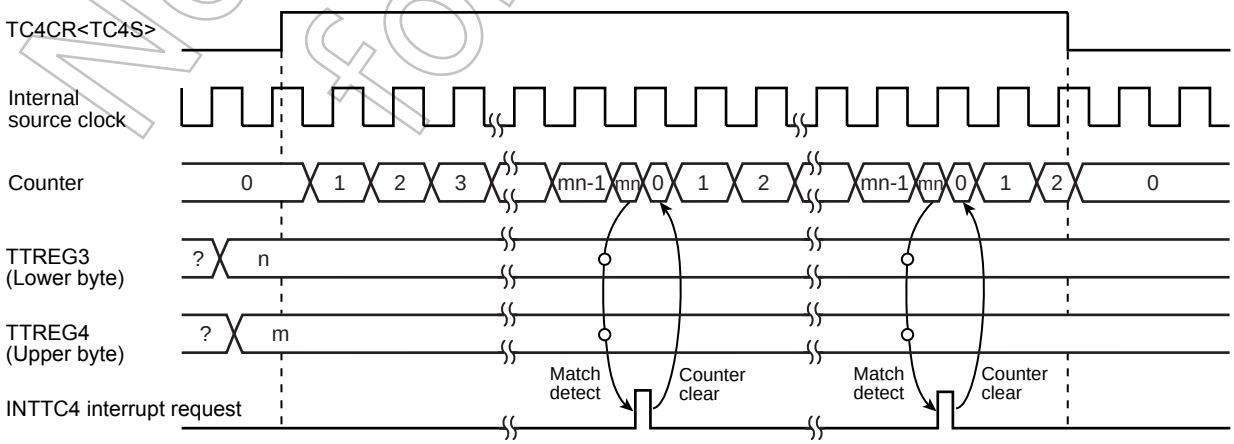

Figure 9-6 16-Bit Timer Mode Timing Chart (TC3 and TC4)

Not Recommended for New Design

9.3.6 16-Bit Event Counter Mode (TC3 and 4)

In the event counter mode, the up-counter counts up at the falling edge to the TC3 pin. The TimerCounter 3 and 4 are cascadable to form a 16-bit event counter.

When a match between the up-counter and the timer register (TTREG3, TTREG4) value is detected after the timer is started by setting TC4CR<TC4S> to 1, an INTTC4 interrupt is generated and the up-counter is cleared.

After being cleared, the up-counter restarts counting at the falling edge of the input pulse to the TC3 pin. Two machine cycles are required for the low- or high-level pulse input to the TC3 pin.

Therefore, a maximum frequency to be supplied is $fc/2^4$ Hz in the NORMAL1/2 or IDLE1/2 mode, and $fs/2^4$ in the SLOW1/2 or SLEEP1/2 mode. Program the lower byte (TTREG3), and upper byte (TTREG4) in this order in the timer register. (Programming only the upper or lower byte should not be attempted.)

Note 1: In the event counter mode, fix TCjCR<TFFj> to 0. If not fixed, the $\overline{PDOj}$, $\overline{PWMj}$ and $\overline{PPGj}$ pins may output pulses.
Note 2: In the event counter mode, do not change the TTREGj setting while the timer is running. Since TTREGj is not in the shift register configuration in the event counter mode, the new value programmed in TTREGj is in effect immediately after the programming. Therefore, if TTREGj is changed while the timer is running, an expected operation may not be obtained.
Note 3: j = 3, 4

9.3.7 16-Bit Pulse Width Modulation (PWM) Output Mode (TC3 and 4)

This mode is used to generate a pulse-width modulated (PWM) signals with up to 16 bits of resolution. The TimerCounter 3 and 4 are cascadable to form the 16-bit PWM signal generator.

The counter counts up using the internal clock or external clock.

When a match between the up-counter and the timer register (PWREG3, PWREG4) value is detected, the logic level output from the timer F/F4 is switched to the opposite state. The counter continues counting. The logic level output from the timer F/F4 is switched to the opposite state again by the counter overflow, and the counter is cleared. The INTTC4 interrupt is generated at this time.

Two machine cycles are required for the high- or low-level pulse input to the TC3 pin. Therefore, a maximum frequency to be supplied is $fc/2^4$ Hz in the NORMAL1/2 or IDLE1/2 mode, and $fs/2^4$ to in the SLOW1/2 or SLEEP1/2 mode.

Since the initial value can be set to the timer F/F4 by TC4CR<TFF4>, positive and negative pulses can be generated. Upon reset, the timer F/F4 is cleared to 0.

(The logic level output from the $\overline{PWM}$4 pin is the opposite to the timer F/F4 logic level.)

Since PWREG4 and 3 in the PWM mode are serially connected to the shift register, the values set to PWREG4 and 3 can be changed while the timer is running. The values set to PWREG4 and 3 during a run of the timer are shifted by the INTTCj interrupt request and loaded into PWREG4 and 3. While the timer is stopped, the values are shifted immediately after the programming of PWREG4 and 3. Set the lower byte (PWREG3) and upper byte (PWREG4) in this order to program PWREG4 and 3. (Programming only the lower or upper byte of the register should not be attempted.)

If executing the read instruction to PWREG4 and 3 during PWM output, the values set in the shift register is read, but not the values set in PWREG4 and 3. Therefore, after writing to the PWREG4 and 3, reading data of PWREG4 and 3 is previous value until INTTC4 is generated.

For the pin used for PWM output, the output latch of the I/O port must be set to 1.

Note 1: In the PWM mode, program the timer register PWREG4 and 3 immediately after the INTTC4 interrupt request is generated (normally in the INTTC4 interrupt service routine.) If the programming of PWREGj and the interrupt request occur at the same time, an unstable value is shifted, that may result in generation of pulse different from the programmed value until the next INTTC4 interrupt request is generated.
Note 2: When the timer is stopped during PWM output, the $\overline{PWM}$4 pin holds the output status when the timer is stopped. To change the output status, program TC4CR<TFF4> after the timer is stopped. Do not program TC4CR<TFF4> upon stopping of the timer.
Example: Fixing the $\overline{PWM}$4 pin to the high level when the TimerCounter is stopped

Not Recommended for New Design

CLR (TC4CR).3: Stops the timer.
CLR (TC4CR).7 : Sets the $\overline{PWM}$4 pin to the high level.

Note 3: To enter the STOP mode, stop the timer and then enter the STOP mode. If the STOP mode is entered without stopping of the timer when fc, fc/2 or fs is selected as the source clock, a pulse is output from the $\overline{PWM}$4 pin during the warm-up period time after exiting the STOP mode.

Table 9-7 16-Bit PWM Output Mode

Source Clock			Resolution		Repeated Cycle	
NORMAL1/2, IDLE1/2 mode		SLOW1/2, SLEEP1/2 mode	fc = 16 MHz	fs = 32.768 kHz	fc = 16 MHz	fs = 32.768 kHz
DV7CK = 0	DV7CK = 1					
$fc/2^{11}$	$fs/2^3$ [Hz]	$fs/2^3$ [Hz]	128 μs	244.14 μs	8.39 s	16 s
$fc/2^7$	$fc/2^7$	–	8 μs	–	524.3 ms	–
$fc/2^5$	$fc/2^5$	–	2 μs	–	131.1 ms	–
$fc/2^3$	$fc/2^3$	–	500 ns	–	32.8 ms	–
fs	fs	fs	30.5 μs	30.5 μs	2 s	2 s
fc/2	fc/2	–	125 ns	–	8.2 ms	–
fc	fc	–	62.5 ns	–	4.1 ms	–

Example :Generating a pulse with 1-ms high-level width and a period of 32.768 ms (fc = 16.0 MHz)

```
                Setting ports
LDW     (PWREG3), 07D0H     : Sets the pulse width.
LD      (TC3CR), 33H        : Sets the operating clock to fc/2^3, and 16-bit PWM output
                              mode (lower byte).
LD      (TC4CR), 056H       : Sets TFF4 to the initial value 0, and 16-bit PWM signal
                              generation mode (upper byte).
LD      (TC4CR), 05EH       : Starts the timer.
```

Not Recommended for New Design

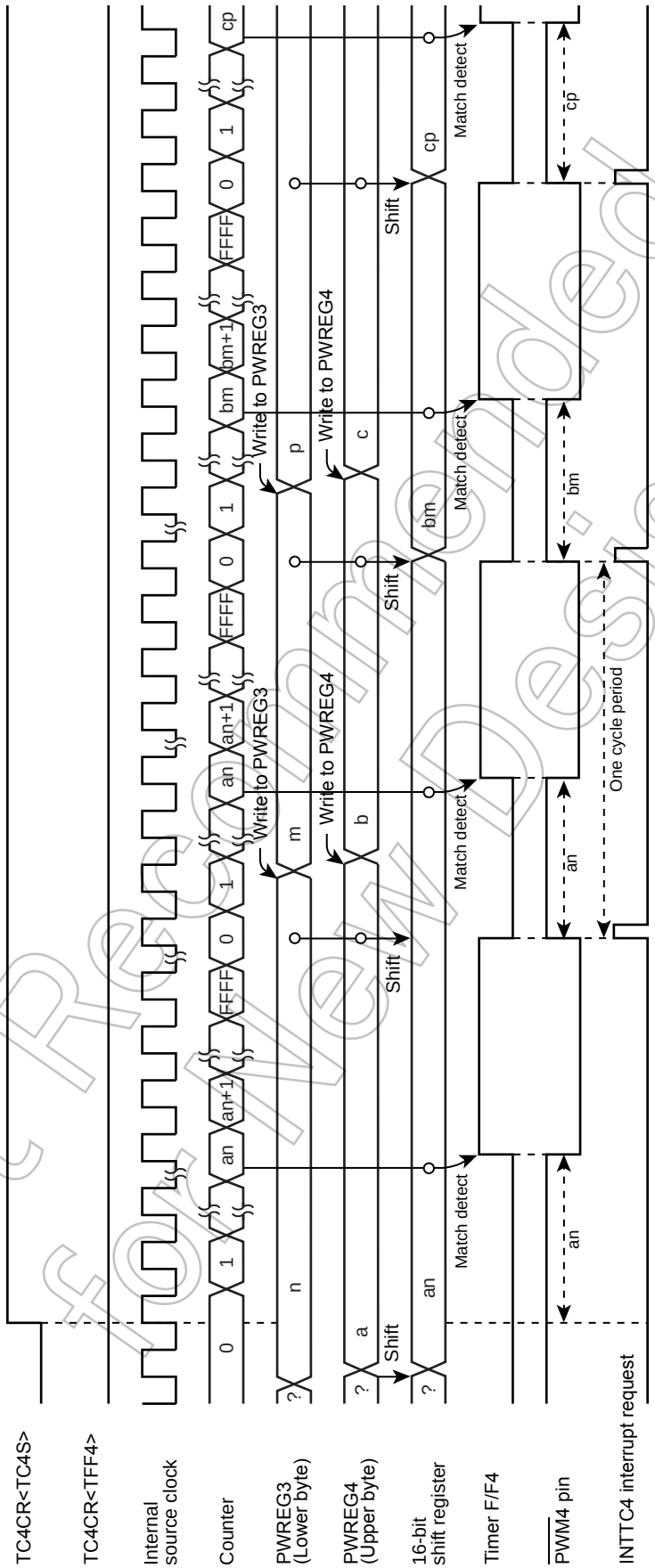

Figure 9-7 16-Bit PWM Mode Timing Chart (TC3 and TC4)

Not Recommended for New Design

9.3.8 16-Bit Programmable Pulse Generate (PPG) Output Mode (TC3 and 4)

This mode is used to generate pulses with up to 16-bits of resolution. The timer counter 3 and 4 are cascadable to enter the 16-bit PPG mode.

The counter counts up using the internal clock or external clock. When a match between the up-counter and the timer register (PWREG3, PWREG4) value is detected, the logic level output from the timer F/F4 is switched to the opposite state. The counter continues counting. The logic level output from the timer F/F4 is switched to the opposite state again when a match between the up-counter and the timer register (TTREG3, TTREG4) value is detected, and the counter is cleared. The INTTC4 interrupt is generated at this time.

Two machine cycles are required for the high- or low-level pulse input to the TC3 pin. Therefore, a maximum frequency to be supplied is $fc/2^4$ Hz in the NORMAL1/2 or IDLE1/2 mode, and $fs/2^4$ to in the SLOW1/2 or SLEEP1/2 mode.

Since the initial value can be set to the timer F/F4 by TC4CR<TFF4>, positive and negative pulses can be generated. Upon reset, the timer F/F4 is cleared to 0.

(The logic level output from the $\overline{PPG}$4 pin is the opposite to the timer F/F4.)

Set the lower byte and upper byte in this order to program the timer register. (TTREG3 → TTREG4, PWREG3 → PWREG4) (Programming only the upper or lower byte should not be attempted.)

For PPG output, set the output latch of the I/O port to 1.

Example :Generating a pulse with 1-ms high-level width and a period of 16.385 ms (fc = 16.0 MHz)

```
                Setting ports
LDW     (PWREG3), 07D0H     : Sets the pulse width.
LDW     (TTREG3), 8002H     : Sets the cycle period.
LD      (TC3CR), 33H        : Sets the operating clock to fc/2^3, and16-bit PPG mode
                              (lower byte).
LD      (TC4CR), 057H       : Sets TFF4 to the initial value 0, and 16-bit
                              PPG mode (upper byte).
LD      (TC4CR), 05FH       : Starts the timer.
```

Note 1: In the PPG mode, do not change the PWREGi and TTREGi settings while the timer is running. Since PWREGi and TTREGi are not in the shift register configuration in the PPG mode, the new values programmed in PWREGi and TTREGi are in effect immediately after programming PWREGi and TTREGi. Therefore, if PWREGi and TTREGi are changed while the timer is running, an expected operation may not be obtained.

Note 2: When the timer is stopped during PPG output, the $\overline{PPG}$4 pin holds the output status when the timer is stopped. To change the output status, program TC4CR<TFF4> after the timer is stopped. Do not change TC4CR<TFF4> upon stopping of the timer.

Example: Fixing the $\overline{PPG}$4 pin to the high level when the TimerCounter is stopped

```
CLR  (TC4CR).3: Stops the timer
CLR  (TC4CR).7: Sets the PPG4 pin to the high level
```

Note 3: i = 3, 4

Not Recommended for New Design

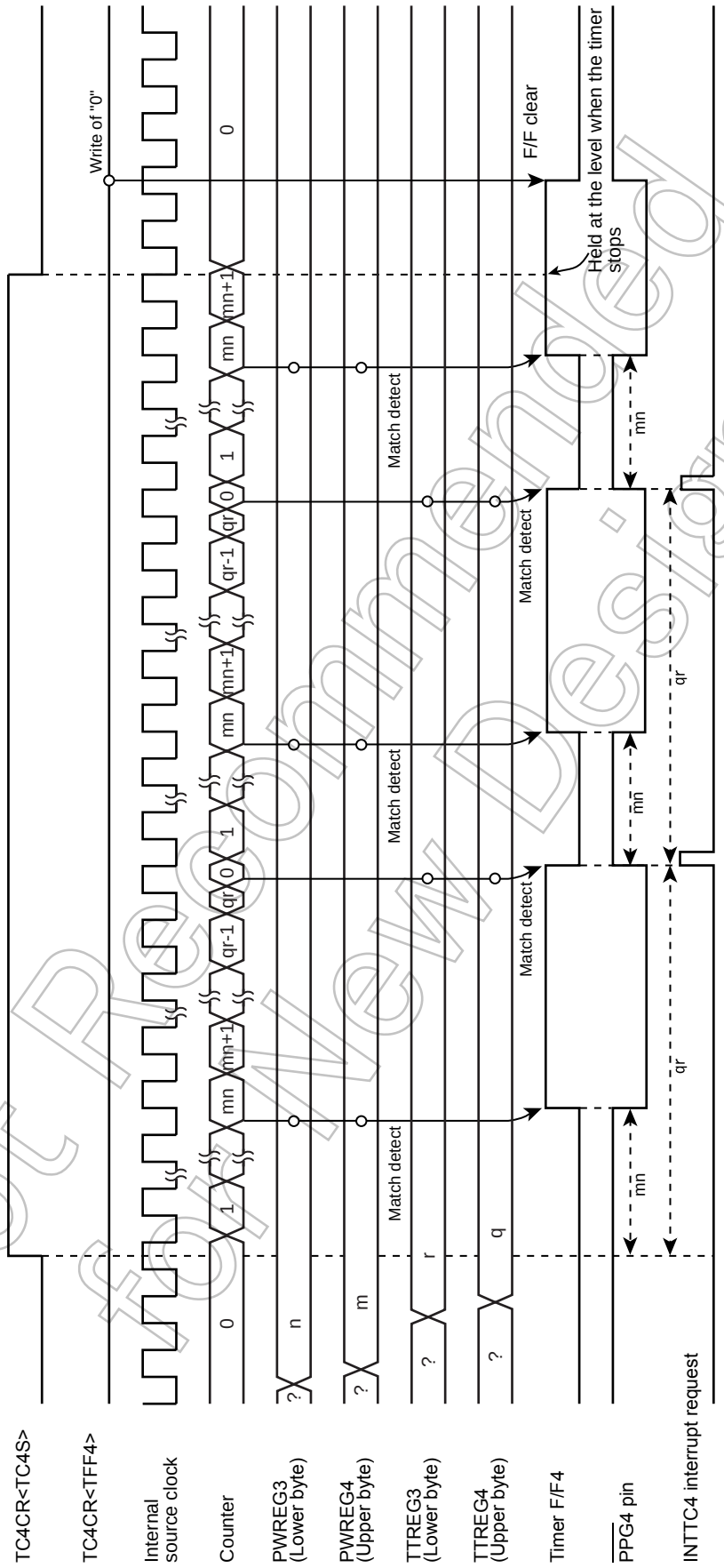

Figure 9-8 16-Bit PPG Mode Timing Chart (TC3 and TC4)

Not Recommended for New Design

9.3.9 Warm-Up Counter Mode

In this mode, the warm-up period time is obtained to assure oscillation stability when the system clocking is switched between the high-frequency and low-frequency. The timer counter 3 and 4 are cascadable to form a 16-bit TimerCounter. The warm-up counter mode has two types of mode; switching from the high-frequency to low-frequency, and vice-versa.

Note 1: In the warm-up counter mode, fix TCiCR<TFFi> to 0. If not fixed, the $\overline{PDOi}$, $\overline{PWMi}$ and $\overline{PPGi}$ pins may output pulses.

Note 2: In the warm-up counter mode, only upper 8 bits of the timer register TTREG4 and 3 are used for match detection and lower 8 bits are not used.

Note 3: i = 3, 4

9.3.9.1 Low-Frequency Warm-up Counter Mode (NORMAL1 → NORMAL2 → SLOW2 → SLOW1)

In this mode, the warm-up period time from a stop of the low-frequency clock fs to oscillation stability is obtained. Before starting the timer, set SYSCR2<XTEN> to 1 to oscillate the low-frequency clock. When a match between the up-counter and the timer register (TTREG4, 3) value is detected after the timer is started by setting TC4CR<TC4S> to 1, the counter is cleared by generating the INTTC4 interrupt request. After stopping the timer in the INTTC4 interrupt service routine, set SYSCR2<SYSCK> to 1 to switch the system clock from the high-frequency to low-frequency, and then clear of SYSCR2<XEN> to 0 to stop the high-frequency clock.

Table 9-8 Setting Time of Low-Frequency Warm-Up Counter Mode (fs = 32.768 kHz)

Minimum Time Setting (TTREG4, 3 = 0100H)	Maximum Time Setting (TTREG4, 3 = FF00H)
7.81 ms	1.99 s

Example :After checking low-frequency clock oscillation stability with TC4 and 3, switching to the SLOW1 mode

```
            SET     (SYSCR2).6      : SYSCR2<XTEN> ← 1
            LD      (TC3CR), 43H    : Sets TFF3=0, source clock fs, and 16-bit mode.
            LD      (TC4CR), 05H    : Sets TFF4=0, and warm-up counter mode.
            LD      (TTREG3), 8000H : Sets the warm-up time.
                                      (The warm-up time depends on the oscillator characteristic.)
            DI                      : IMF ← 0
            SET     (EIRH). 3       : Enables the INTTC4.
            EI                      : IMF ← 1
            SET     (TC4CR).3       : Starts TC4 and 3.
              :         :
PINTTC4:    CLR     (TC4CR).3       : Stops TC4 and 3.
            SET     (SYSCR2).5      : SYSCR2<SYSCK> ← 1
                                      (Switches the system clock to the low-frequency clock.)
            CLR     (SYSCR2).7      : SYSCR2<XEN> ← 0 (Stops the high-frequency clock.)
            RETI
              :         :
VINTTC4:    DW      PINTTC4         : INTTC4 vector table
```

Not Recommended for New Design

9.3.9.2 High-Frequency Warm-Up Counter Mode (SLOW1 → SLOW2 → NORMAL2 → NORMAL1)

In this mode, the warm-up period time from a stop of the high-frequency clock fc to the oscillation stability is obtained. Before starting the timer, set SYSCR2<XEN> to 1 to oscillate the high-frequency clock. When a match between the up-counter and the timer register (TTREG4, 3) value is detected after the timer is started by setting TC4CR<TC4S> to 1, the counter is cleared by generating the INTTC4 interrupt request. After stopping the timer in the INTTC4 interrupt service routine, clear SYSCR2<SYSCK> to 0 to switch the system clock from the low-frequency to high-frequency, and then SYSCR2<XTEN> to 0 to stop the low-frequency clock.

Table 9-9 Setting Time in High-Frequency Warm-Up Counter Mode

Minimum time Setting (TTREG4, 3 = 0100H)	Maximum time Setting (TTREG4, 3 = FF00H)
16 μs	4.08 ms

Example :After checking high-frequency clock oscillation stability with TC4 and 3, switching to the NORMAL1 mode

```
            SET     (SYSCR2).7          : SYSCR2<XEN> ← 1
            LD      (TC3CR), 63H        : Sets TFF3=0, source clock fc, and 16-bit mode.
            LD      (TC4CR), 05H        : Sets TFF4=0, and warm-up counter mode.
            LD      (TTREG3), 0F800H    : Sets the warm-up time.
                                          (The warm-up time depends on the oscillator characteristic.)
            DI                          : IMF ← 0
            SET     (EIRH). 3           : Enables the INTTC4.
            EI                          : IMF ← 1
            SET     (TC4CR).3           : Starts the TC4 and 3.
              :       :
PINTTC4:    CLR     (TC4CR).3           : Stops the TC4 and 3.
            CLR     (SYSCR2).5          : SYSCR2<SYSCK> ← 0
                                          (Switches the system clock to the high-frequency clock.)
            CLR     (SYSCR2).6          : SYSCR2<XTEN> ← 0
                                          (Stops the low-frequency clock.)
            RETI
              :       :
VINTTC4:    DW      PINTTC4             : INTTC4 vector table
```

Not Recommended for New Design

10. Asynchronous Serial interface (UART)

10.1 Configuration

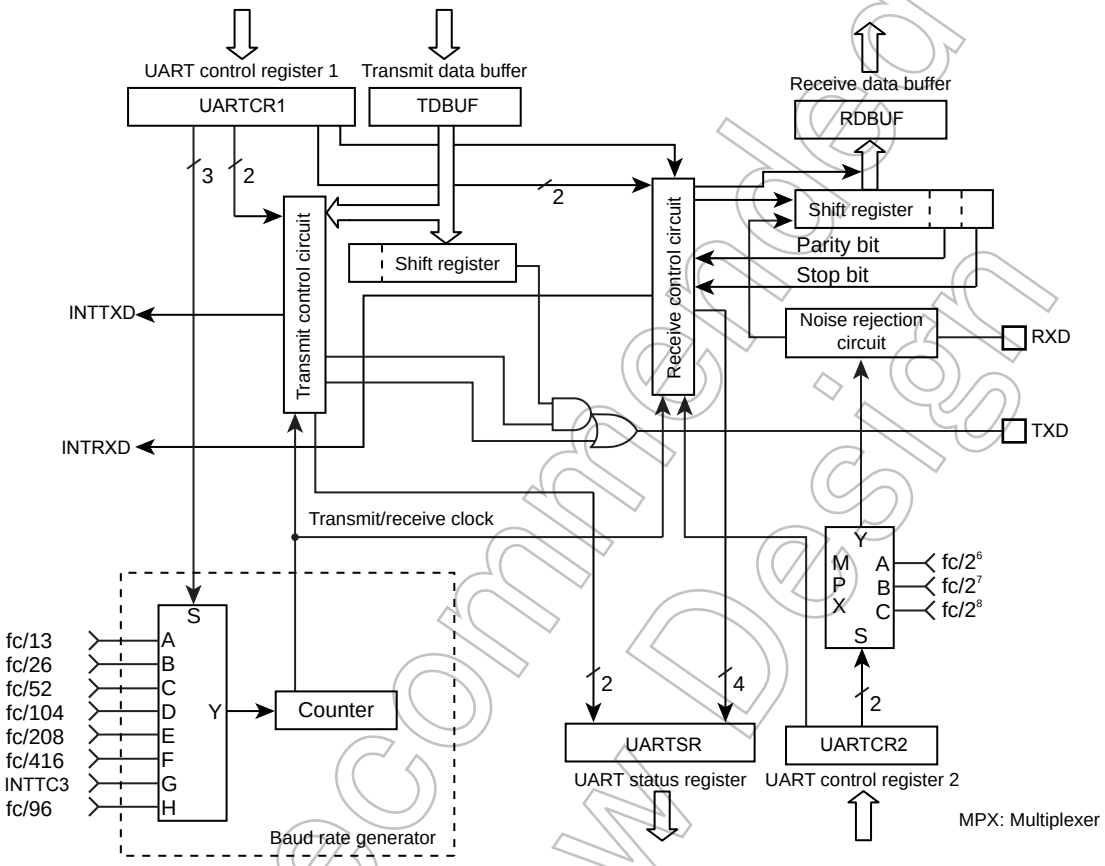

Figure 10-1 UART (Asynchronous Serial Interface)

Not Recommended for New Design

10.2 Control

UART is controlled by the UART Control Registers (UARTCR1, UARTCR2). The operating status can be monitored using the UART status register (UARTSR).

UART Control Register1

UARTCR1 (0025H)	7	6	5	4	3	2	1	0	
	TXE	RXE	STBT	EVEN	PE	BRG			(Initial value: 0000 0000)

TXE	Transfer operation	0: Disable 1: Enable	Write only
RXE	Receive operation	0: Disable 1: Enable	
STBT	Transmit stop bit length	0: 1 bit 1: 2 bits	
EVEN	Even-numbered parity	0: Odd-numbered parity 1: Even-numbered parity	
PE	Parity addition	0: No parity 1: Parity	
BRG	Transmit clock select	000: fc/13 [Hz] 001: fc/26 010: fc/52 011: fc/104 100: fc/208 101: fc/416 110: TC3 (Input INTTC3) 111: fc/96	

Note 1: When operations are disabled by setting TXE and RXE bit to “0”, the setting becomes valid when data transmit or receive complete. When the transmit data is stored in the transmit data buffer, the data are not transmitted. Even if data transmit is enabled, until new data are written to the transmit data buffer, the current data are not transmitted.

Note 2: The transmit clock and the parity are common to transmit and receive.

Note 3: UARTCR1<RXE> and UARTCR1<TXE> should be set to “0” before UARTCR1<BRG> is changed.

UART Control Register2

UARTCR2 (0026H)	7	6	5	4	3	2	1	0	
						RXDNC		STOPBR	(Initial value: **** *000)

RXDNC	Selection of RXD input noise rejection time	00: No noise rejection (Hysteresis input) 01: Rejects pulses shorter than 31/fc [s] as noise 10: Rejects pulses shorter than 63/fc [s] as noise 11: Rejects pulses shorter than 127/fc [s] as noise	Write only
STOPBR	Receive stop bit length	0: 1 bit 1: 2 bits	

Note: When UARTCR2<RXDNC> = “01”, pulses longer than 96/fc [s] are always regarded as signals; when UARTCR2<RXDNC> = “10”, longer than 192/fc [s]; and when UARTCR2<RXDNC> = “11”, longer than 384/fc [s].

Not Recommended for New Design

UART Status Register

UARTSR (0025H)

7	6	5	4	3	2	1	0
PERR	FERR	OERR	RBFL	TEND	TBEP		

(Initial value: 0000 11**)

PERR	Parity error flag	0: No parity error 1: Parity error	Read only
FERR	Framing error flag	0: No framing error 1: Framing error	
OERR	Overrun error flag	0: No overrun error 1: Overrun error	
RBFL	Receive data buffer full flag	0: Receive data buffer empty 1: Receive data buffer full	
TEND	Transmit end flag	0: On transmitting 1: Transmit end	
TBEP	Transmit data buffer empty flag	0: Transmit data buffer full (Transmit data writing is finished) 1: Transmit data buffer empty	

Note: When an INTTXD is generated, TBEP flag is set to "1" automatically.

UART Receive Data Buffer

RDBUF (0027H)

7	6	5	4	3	2	1	0

Read only

(Initial value: 0000 0000)

UART Transmit Data Buffer

TDBUF (0027H)

7	6	5	4	3	2	1	0

Write only

(Initial value: 0000 0000)

Not Recommended for New Design

10.3 Transfer Data Format

In UART, an one-bit start bit (Low level), stop bit (Bit length selectable at high level, by UARTCR1<STBT>), and parity (Select parity in UARTCR1<PE>; even- or odd-numbered parity by UARTCR1<EVEN>) are added to the transfer data. The transfer data formats are shown as follows.

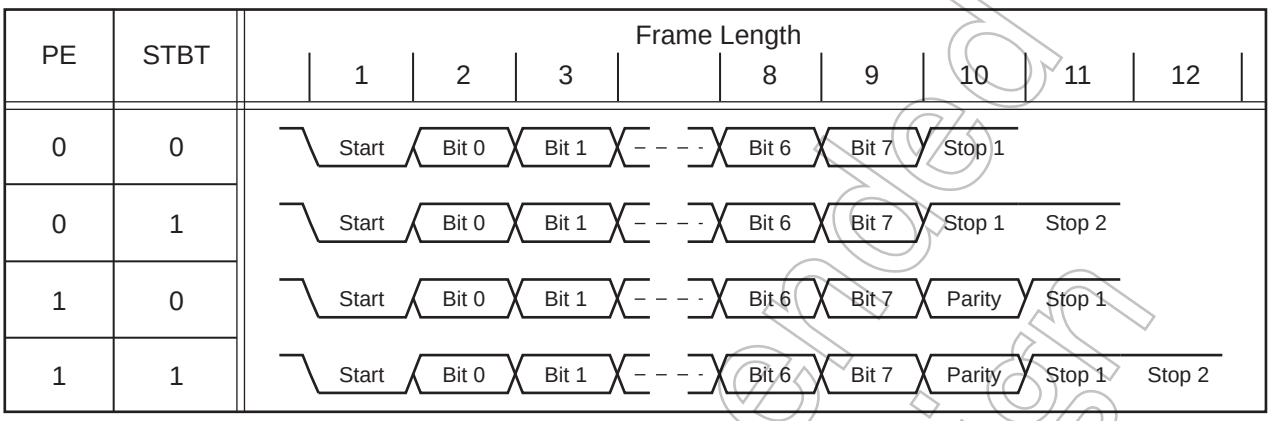

Figure 10-2 Transfer Data Format

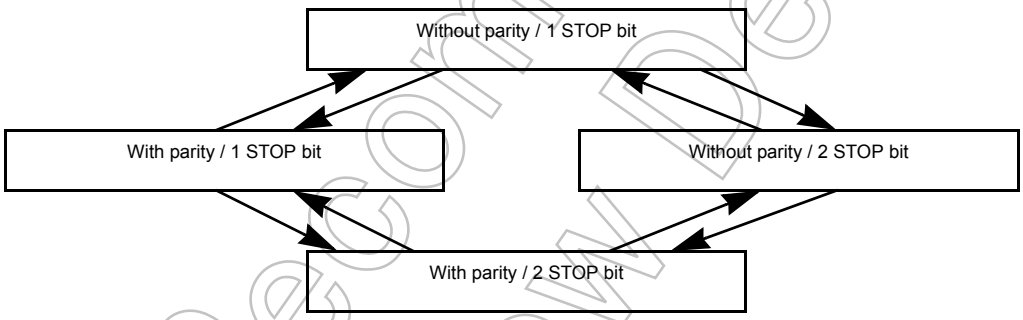

Figure 10-3 Caution on Changing Transfer Data Format

Note: In order to switch the transfer data format, perform transmit operations in the above Figure 10-3 sequence except for the initial setting.

Not Recommended for New Design

10.4 Transfer Rate

The baud rate of UART is set of UARTCR1<BRG>. The example of the baud rate are shown as follows.

Table 10-1 Transfer Rate (Example)

BRG	Source Clock		
	16 MHz	8 MHz	4 MHz
000	76800 [baud]	38400 [baud]	19200 [baud]
001	38400	19200	9600
010	19200	9600	4800
011	9600	4800	2400
100	4800	2400	1200
101	2400	1200	600

When TC3 is used as the UART transfer rate (when UARTCR1<BRG> = "110"), the transfer clock and transfer rate are determined as follows:

Transfer clock [Hz] = TC3 source clock [Hz] / TTREG3 setting value

Transfer Rate [baud] = Transfer clock [Hz] / 16

10.5 Data Sampling Method

The UART receiver keeps sampling input using the clock selected by UARTCR1<BRG> until a start bit is detected in RXD pin input. RT clock starts detecting "L" level of the RXD pin. Once a start bit is detected, the start bit, data bits, stop bit(s), and parity bit are sampled at three times of RT7, RT8, and RT9 during one receiver clock interval (RT clock). (RT0 is the position where the bit supposedly starts.) Bit is determined according to majority rule (The data are the same twice or more out of three samplings).

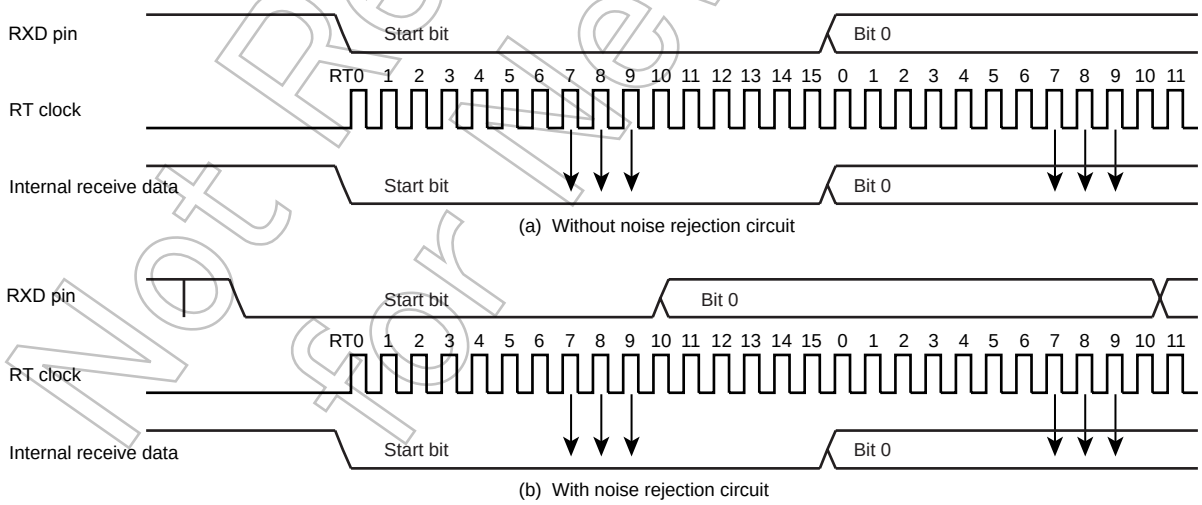

Figure 10-4 Data Sampling Method

Not Recommended for New Design

10.6 STOP Bit Length

Select a transmit stop bit length (1 bit or 2 bits) by UARTCR1<STBT>.

10.7 Parity

Set parity / no parity by UARTCR1<PE> and set parity type (Odd- or Even-numbered) by UARTCR1<EVEN>.

10.8 Transmit/Receive Operation

10.8.1 Data Transmit Operation

Set UARTCR1<TXE> to “1”. Read UARTSR to check UARTSR<TBEP> = “1”, then write data in TDBUF (Transmit data buffer). Writing data in TDBUF zero-clears UARTSR<TBEP>, transfers the data to the transmit shift register and the data are sequentially output from the TXD pin. The data output include a one-bit start bit, stop bits whose number is specified in UARTCR1<STBT> and a parity bit if parity addition is specified. Select the data transfer baud rate using UARTCR1<BRG>. When data transmit starts, transmit buffer empty flag UARTSR<TBEP> is set to “1” and an INTTXD interrupt is generated.

While UARTCR1<TXE> = “0” and from when “1” is written to UARTCR1<TXE> to when send data are written to TDBUF, the TXD pin is fixed at high level.
When transmitting data, first read UARTSR, then write data in TDBUF. Otherwise, UARTSR<TBEP> is not zero-cleared and transmit does not start.

10.8.2 Data Receive Operation

Set UARTCR1<RXE> to “1”. When data are received via the RXD pin, the receive data are transferred to RDBUF (Receive data buffer). At this time, the data transmitted includes a start bit and stop bit(s) and a parity bit if parity addition is specified. When stop bit(s) are received, data only are extracted and transferred to RDBUF (Receive data buffer). Then the receive buffer full flag UARTSR<RBFL> is set and an INTRXD interrupt is generated. Select the data transfer baud rate using UARTCR1<BRG>.

If an overrun error (OERR) occurs when data are received, the data are not transferred to RDBUF (Receive data buffer) but discarded; data in the RDBUF are not affected.

Note: When a receive operation is disabled by setting UARTCR1<RXE> bit to “0”, the setting becomes valid when data receive is completed. However, if a framing error occurs in data receive, the receive-disabling setting may not become valid. If a framing error occurs, be sure to perform a re-receive operation.

Not Recommended for New Design

10.9 Status Flag

10.9.1 Parity Error

When parity determined using the receive data bits differs from the received parity bit, the parity error flag UARTSR<PERR> is set to “1”. The UARTSR<PERR> is cleared to “0” when the RDBUF is read after reading the UARTSR.

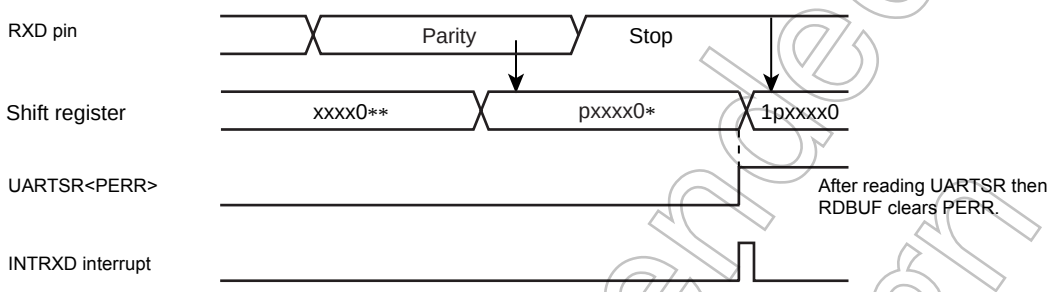

Figure 10-5 Generation of Parity Error

10.9.2 Framing Error

When “0” is sampled as the stop bit in the receive data, framing error flag UARTSR<FERR> is set to “1”. The UARTSR<FERR> is cleared to “0” when the RDBUF is read after reading the UARTSR.

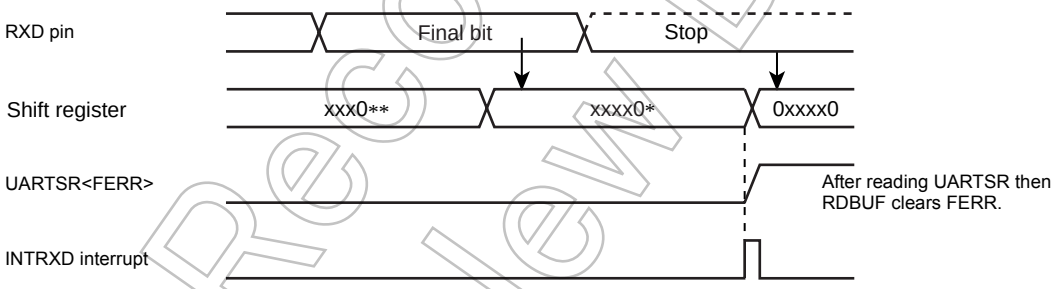

Figure 10-6 Generation of Framing Error

10.9.3 Overrun Error

When all bits in the next data are received while unread data are still in RDBUF, overrun error flag UARTSR<OERR> is set to “1”. In this case, the receive data is discarded; data in RDBUF are not affected. The UARTSR<OERR> is cleared to “0” when the RDBUF is read after reading the UARTSR.

Not Recommended for New Design

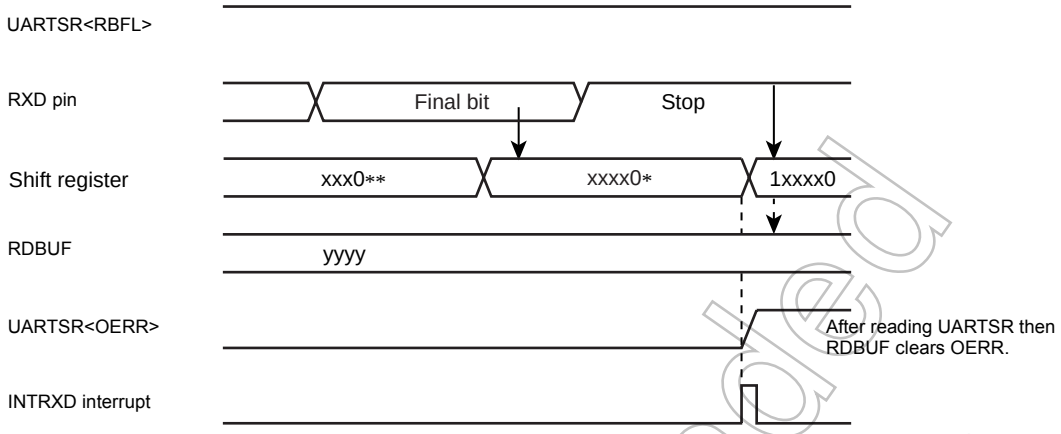

Figure 10-7 Generation of Overrun Error

Note: Receive operations are disabled until the overrun error flag UARTSR<OERR> is cleared.

10.9.4 Receive Data Buffer Full

Loading the received data in RDBUF sets receive data buffer full flag UARTSR<RBFL> to "1". The UARTSR<RBFL> is cleared to “0” when the RDBUF is read after reading the UARTSR.

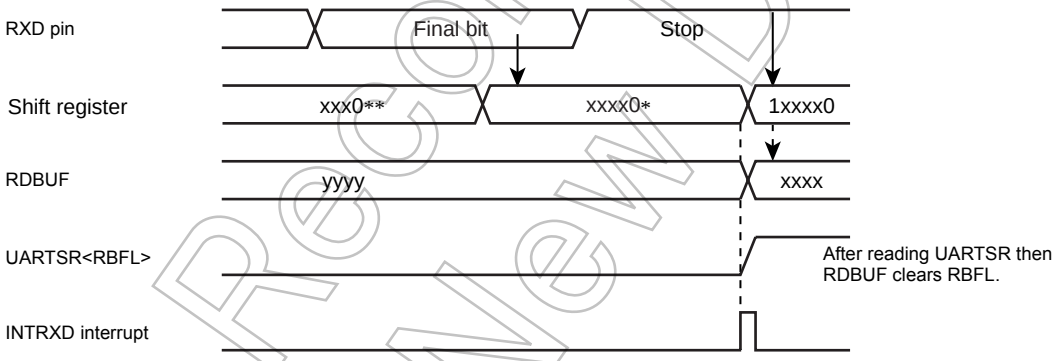

Figure 10-8 Generation of Receive Data Buffer Full

Note: If the overrun error flag UARTSR<OERR> is set during the period between reading the UARTSR and reading the RDBUF, it cannot be cleared by only reading the RDBUF. Therefore, after reading the RDBUF, read the UARTSR again to check whether or not the overrun error flag which should have been cleared still remains set.

10.9.5 Transmit Data Buffer Empty

When no data is in the transmit buffer TDBUF, that is, when data in TDBUF are transferred to the transmit shift register and data transmit starts, transmit data buffer empty flag UARTSR<TBEP> is set to “1”. The UARTSR<TBEP> is cleared to “0” when the TDBUF is written after reading the UARTSR.

Not Recommended for New Design

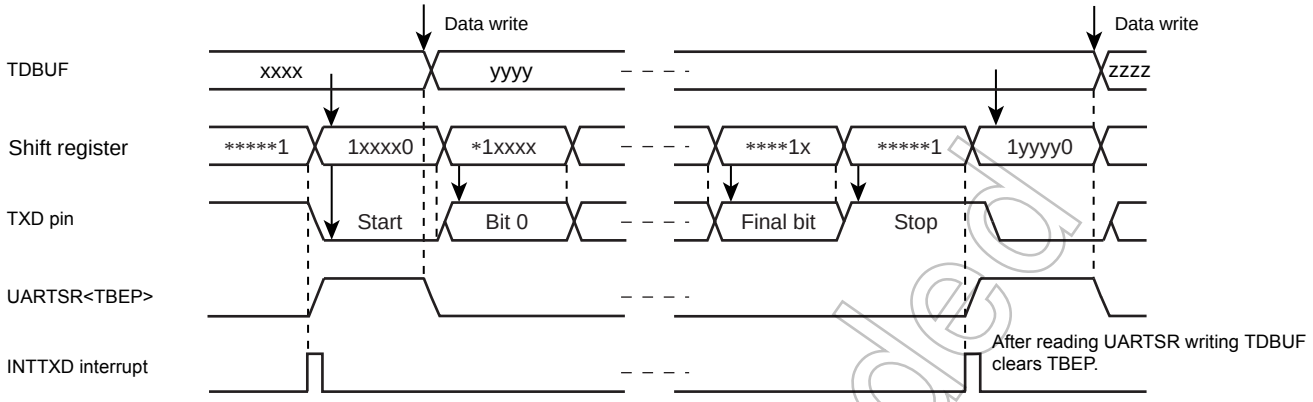

Figure 10-9 Generation of Transmit Data Buffer Empty

10.9.6 Transmit End Flag

When data are transmitted and no data is in TDBUF (UARTSR<TBEP> = "1"), transmit end flag UARTSR<TEND> is set to "1". The UARTSR<TEND> is cleared to "0" when the data transmit is started after writing the TDBUF.

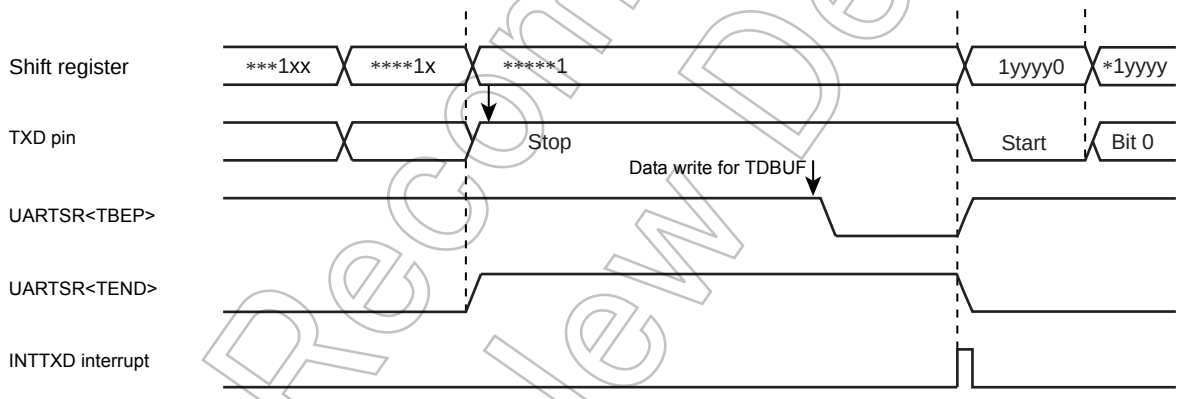

Figure 10-10 Generation of Transmit End Flag and Transmit Data Buffer Empty

Not Recommended for New Design

Not Recommended for New Design

11. Serial Expansion Interface (SEI)

SEI is one of the serial interfaces incorporated in the TMP86P807NG. It allows connection to peripheral devices via full-duplex synchronous communication protocols. The TMP86P807NG contain one channel of SEI.

SEI is connected with an external device through SCLK, MOSI, MISO and the terminal $\overline{SS}$. SCLK, MOSI, MISO, and $\overline{SS}$ pins respectively are shared with P02, P03, P04 and P05. When using these ports as SCLK, MOSI, MISO, or $\overline{SS}$ pins, set the each Port Output Latch to “1”.

11.1 Features

- The master outputs the shift clock for only a data transfer period.
- The clock polarity and phase are programmable.
- The data is 8 bits long.
- MSB or LSB-first can be selected.
- The programmable data and clock timing of SEI can be connected to almost all synchronous serial peripheral devices. Refer to “" 11.5 SEI Transfer Formats "”.
- The transfer rate can be selected from the following four (master only):
  4 Mbps, 2 Mbps, 1 Mbps, or 250 kbps (when operating at 16 MHz)
- The error detection circuit supports the following functions:

  a. Write collision detection: When the shift register is accessed for write during transfer

  b. Overflow detection: When new data is received while the transfer-finished flag is set (slave only)

Note: Mode fault detect function is not supported. Make sure to set SECR<MODE> bit to "1" for disabling the Mode fault detection.

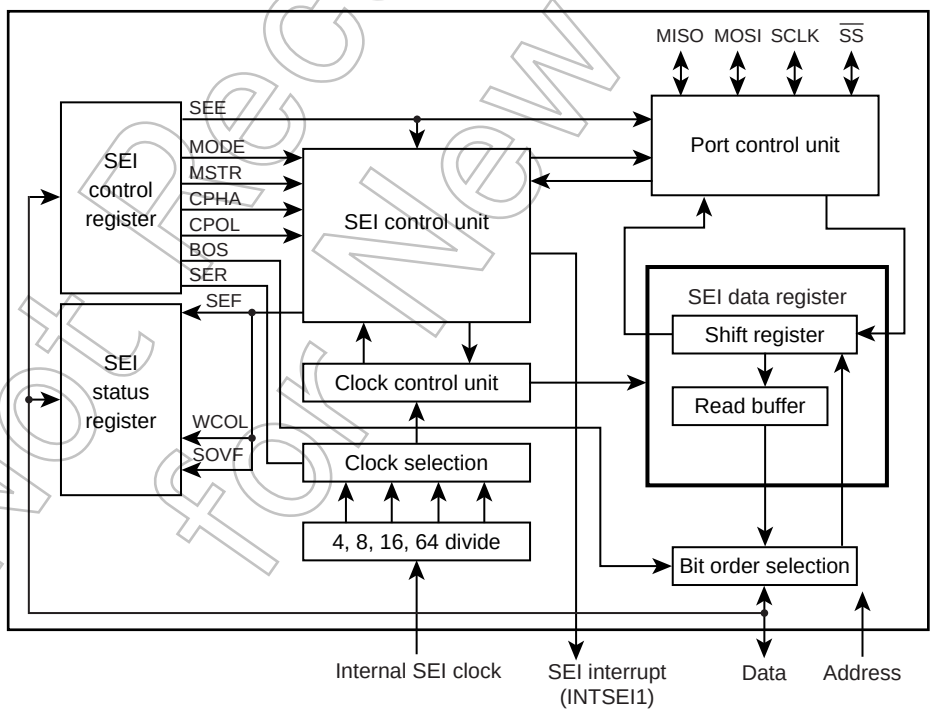

Figure 11-1 SEI (Serial Extended Interface)

Not Recommended for New Design

11.2 SEI Registers

The SEI interface has the SEI Control Register (SECR), SEI Status Register (SESR), and SEI Data Register (SEDR) which are used to set up the SEI system and enable/disable SEI operation.

11.2.1 SEI Control Register (SECR)

	7	6	5	4	3	2	1	0	
SECR (002AH)	MODE	SEE	BOS	MSTR	CPOL	CPHA	SER		(Initial value: 0000 0100)

Read-modify-write instruction are prohibited

MODE	Mode fault detection#1	0: Enables mode fault detection 1: Disables mode fault detection It is available in Master mode only. (Note: Make sure to set <MODE> bit to "1" for disabling Mode fault detection	R/W
SEE	SEI operation#2	0: Disables SEI operation 1: Enables SEI operation	
BOS	Bit order selection	0: Transmitted beginning with the MSB (bit 7) of SEDR register 1: Transmitted beginning with the LSB (bit 0) of SEDR register	
MSTR	Mode selection#3	0: Sets SEI for slave 1: Sets SEI for master	
CPOL	Clock polarity	0: Selects active-"H" clock. SCLK remains "L" when IDLE. 1: Selects active-"L" clock. SCLK remains "H" when IDLE.	
CPHA	Clock phase	Selects clock phase. For details, refer to Section "SEI Transfer Formats".	
SER	Selects SEI transfer rate	00: Divide-by-4 01: Divide-by-8 10: Divide-by-16 11: Divide-by-64	

#1 If mode fault detection is enabled, an interrupt is generated when the MODF flag (SESR<MODF>) is set.
#2 SEI operation can only be disabled after transfer is completed. Before the SEI can be used, the each Port Control Register and Output Latch Control must be set for the SEI function (In case P0 port, P0OUTCR and P0DR).
When using the SEI as the master, set the SECR<SEE> bit to "1" (to enable SEI operation) and then place transmit data in the SEDR register. This initiates transmission/reception.
#3 Master/slave settings must be made before enabling SEI operation (This means that the SECR<MSTR> bit must first be set before setting the SECR<SEE> bit to "1").

11.2.1.1 Transfer rate

(1) Master mode (Transfer rate = fc/Internal clock divide ratio (unit : bps))

The table below shows the relationship between settings of the SER bit and transfer bit rates when the SEI is operating as the master.

Table 11-1 SEI Transfer Rate

SER	Internal Clock Divide Ratio of SEI	Transfer Rate when fc = 16 MHz
00	4	4 Mbps
01	8	2 Mbps
10	16	1 Mbps
11	64	250 kbps

Not Recommended for New Design

(2) Slave mode

When the SEI is operating as a slave, the serial clock is input from the master and the setting of the SER bit has no effect. The maximum transfer rate is fc/4.

Note: Take note of the following relationship between the serial clock speed and fc on the master side:
15.625 kbps < Transfer rate < fc/4 bps
Example) 15.625 kbps < Transfer rate < 4 Mbps (fc = 16 MHz at V_{DD} = 4.5 to 5.5 V)
15.625 kbps < Transfer rate < 2 Mbps (fc = 8 MHz at V_{DD} = 2.7 to 5.5 V)

11.2.2 SEI Status Register (SESR)

	7	6	5	4	3	2	1	0	
SESR (0028H)	SEF	WCOL	SOVF	–					(Initial value: 0000 ****)

SEF	Transfer-finished flag#1	0: Transfer in progress 1: Transfer completed	Read only
WCOL	Write collision error flag#2	0: No write collision error occurred 1: Write collision error occurred	
SOVF	Overflow error flag (slave)#3	0: No overflow occurred 1: Overflow occurred	

#1 The SEF flag is automatically set at completion of transfer. The SEF flag thus set is automatically cleared by reading the SESR register and accessing the SEDR register.

#2 The WCOL flag is automatically set by a write to the SEDR register while transfer is in progress. Writing to the SEDR register during transfer has no effect. The WCOL flag thus set is automatically cleared by reading the SESR register and accessing the SEDR register. No interrupts are generated for reasons that the WCOL flag is set.

#3 During master mode:
This bit does not function; its data when read is “0”.
During slave mode:
The SOVF flag is automatically set when the device finishes reading the next data while the SEF flag is set. The SOVF flag thus set is automatically cleared by reading the SESR register and accessing the SEDR register. The SOVF flag also is cleared by a switchover to master mode. No interrupts are generated for reasons that the SOVF flag is set.

11.2.3 SEI Data Register (SEDR)

The SEI Data Register (SEDR) is used to send and receive data. When the SEI is set for master, data transfer is initiated by writing to this SEDR register. If the master device needs to write to the SEDR register after transfer began, always check to see by means of an interrupt or by polling that the SEF flag (SESR<SEF>) is set, before writing to the SEDR register.

	7	6	5	4	3	2	1	0	
SEDR (0029H)	SED7	SED6	SED5	SED4	SED3	SED2	SED1	SED0	R/W (Initial value: 0000 0000)

Not Recommended for New Design

11.3 SEI Operation

During a SEI transfer, data transmission (serial shift-out) and reception (serial shift-in) are performed simultaneously. The serial clock synchronizes the timing at which information on the two serial data lines are shifted or sampled. Slave device can be selected individually using the slave select pin ($\overline{SS}$ pin). For unselected slave devices, data on the SEI bus cannot be taken in.

When operating as the master devices, the $\overline{SS}$ pin can be used to indicate multiple-master bus connection.

11.3.1 Controlling SEI clock polarity and phase

The SEI clock allows its phase and polarity to be selected in software from four combinations available by using two bits, CPHA and CPOL (SECR<CPHL,CPOL>).

The clock polarity is set by CPOL to select between active-high or active-low (The transfer format is unaffected).

The clock phase is set by CPHA. The master device and the slave devices to communicate with must have the same clock phase and polarity.

If multiple slave devices with different transfer formats exist on the same bus, the format can be changed to that of the slave device to which to transfer.

Table 11-2 Clock Phase and Polarity

CPHA	SEI control register (SECR 002AH) bit 2
CPOL	SEI control register (SECR 002AH) bit 3

11.3.2 SEI data and clock timing

The programmable data and clock timing of SEI allows connection to almost all synchronous serial peripheral devices. Refer to Section “" 11.5 SEI Transfer Formats "”.

Not Recommended for New Design

11.4 SEI Pin Functions

The TMP86P807NG have four input/output pins associated with SEI transfer. The functionality of each pin depends on the SEI device's mode (master or slave).
The SCLK pin, MOSI pin and MISO pin of all SEI devices are connected with the same name pin to each other .

11.4.1 SCLK pin

The SCLK pin functions as an output pin when SEI is set for master, or as an input pin when SEI is set for slave.

When SEI is set for master, serial clock is output from the SCLK pin to external devices. After the master starts transfer, eight serial clock pulses are output from the SCLK pin only during transfer.

When SEI is set for slave, the SCLK pin functions as an input pin.

During data transfer between master and slave, device operation is synchronized by the serial clock output from the master.

When the $\overline{SS}$ pin of the slave device is "H", data is not taken in regardless of whether the serial clock is available.

For both master and slave devices, data is shifted in and out at a rising or falling edge of the serial clock, and is sampled at the opposite edge where the data is stable. The active edge is determined by SEI transfer protocols.

Note: Noise in a slave device's SCLK input may cause the device to operate erratically.

11.4.2 MISO/MOSI pins

The MISO and MOSI pins are used for serial data transmission/reception. The status of each pin during master and slave are shown in the table below.

Table 11-3 MISO/MOSI Pin Status

	MISO	MOSI
Master	Input	Output
Slave	Output	Input

Also, the SCLK, MOSI, and MISO pins can be set for open-drain by the each pin's input/output control register (In case P0 Port, Input/output Control Register is P0OUTCR).

The MISO pin of a slave device becomes an output when the SECR<SEE> bit is set to 1 (SEI operation enabled). To set the MISO pin of an inactive slave device to a high-impedance state, clear the SECR<SEE> bit to 0.

11.4.3 $\overline{SS}$ pin

The $\overline{SS}$ pin function differently when the SEI is the master and when it is a slave.

When the SEI is a slave, this pin is used to enable the SEI transmission/reception. When the slave's $\overline{SS}$ pin is high, the slave device ignores the serial clock from the master. Nor does it receive data from the MISO pin. When the slave's $\overline{SS}$ pin is L, the SEI operates as slave.

Not Recommended for New Design

11.5 SEI Transfer Formats

The transfer formats are set using CPHA and CPOL (SECR<CPHA,CPOL>). CPHA allows transfer protocols to be selected between two.

11.5.1 CPHA (SECR register bit 2) = 0 format

Figure 11-2 shows a transfer format where CPHA = 0.

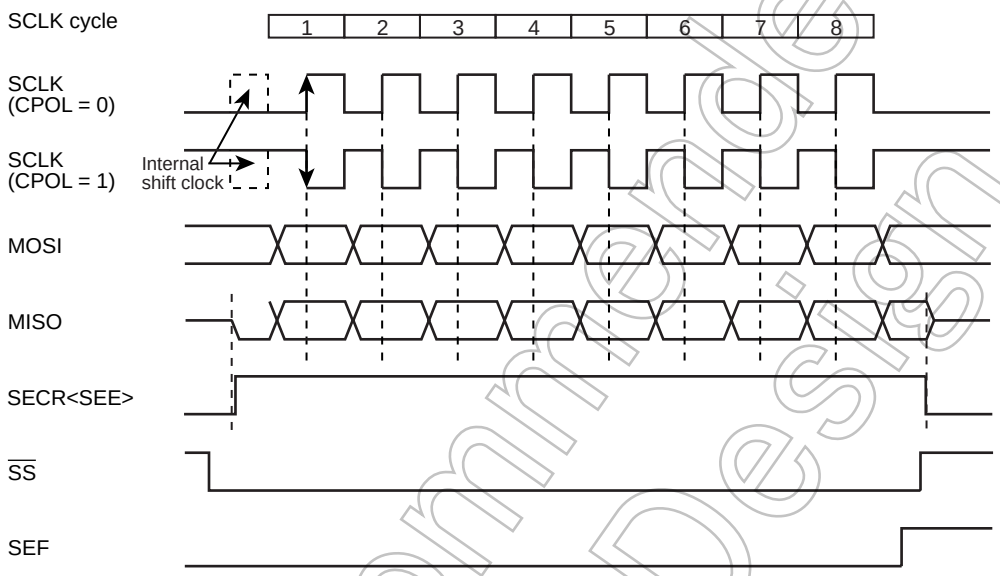

Figure 11-2 Transfer Format where CPHA = 0

Table 11-4 Transfer Format Details where CPHA = 0

	SCLK Level when not Communicating (IDLE)	Data Shift	Data Sampling
CPOL = 0	"L" level	Falling edge of transfer clock	Rising edge of transfer clock
CPOL = 1	"H" level	Rising edge of transfer clock	Falling edge of transfer clock

- In master mode, transfer is initiated by writing new data to the SEDR register. At this time, the new data changes state on the MOSI pin a half clock period before the shift clock starts pulsing. Use BOS (SECR<BOS>) to select whether the data should be shifted out beginning with the MSB or LSB. The SEF flag (SESR<SEF>) is set after the last shift cycle.
- In slave mode, writing data to the SEDR register is inhibited when the $\overline{SS}$ pin is "L". A write during this period causes collision of writes, so that the WCOL flag (SESR<WCOL>) is set.
  Therefore, when writing data to the SEDR (SEI Data Register) after the SEF flag is set upon completion of transfer, make sure the $\overline{SS}$ pin goes "H" again before writing the next data to the SEDR register.

Note: In slave mode, be careful not to write data while the SEF flag is set and the $\overline{SS}$ pin remains "L".

11.5.2 CPHA = 1 format

Figure 11-3 shows a transfer format where CPHA = 1.

Not Recommended for New Design

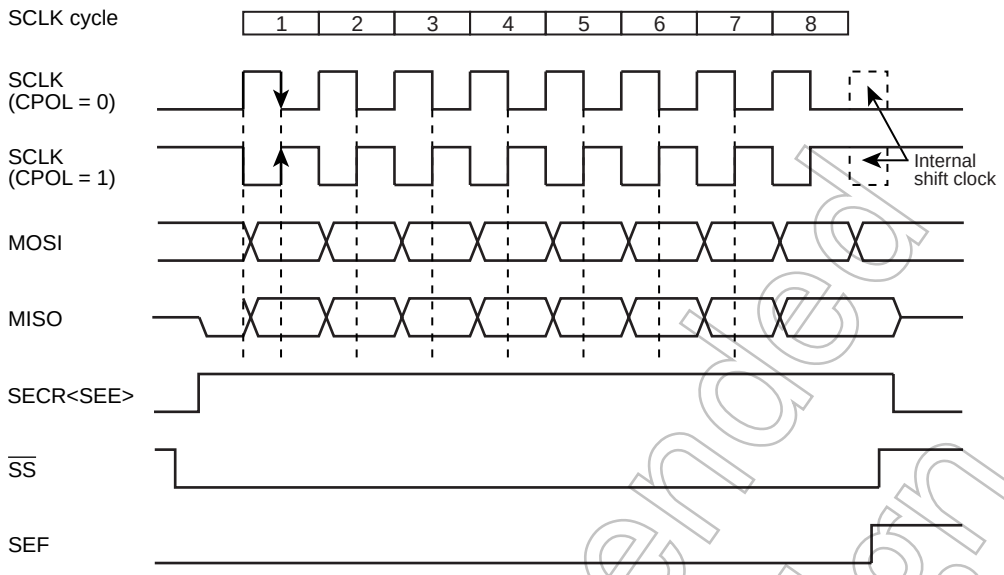

Figure 11-3 Transfer Format where CPHA = 1

Table 11-5 Transfer Format Details where CPHA = 1

	SCLK Level when Not Communicating (IDLE)	Data Shift	Data Sampling
CPOL=0	"L" level	Rising edge of transfer clock	Falling edge of transfer clock
CPOL=1	"H" level	Falling edge of transfer clock	Rising edge of transfer clock

- In master mode, transfer is initiated by writing new data to the SEDR register. The new data changes state on the MOSI pin at the first edge of the shift clock. Use BOS (SECR<BOS>) to select whether the data should be shifted out beginning with the MSB or LSB.
- In slave mode, unlike in the case of CPHA = 0 format, data can be written to the SEDR (SEI Data Register) regardless of whether the $\overline{SS}$ pin is "L" or "H".
  In both master and slave modes, the SEF flag (SESR<SEF>) is set after the last shift cycle.
  Writing data to the SEDR register while data transfer is in progress causes collision of writes. Therefore, wait until the SEF flag is set before writing new data to the SEDR register.

Not Recommended for New Design

11.6 Functional Description

Figure 11-4 shows how the SEI master and slave are connected.

When the master device sends data from its MOSI pin to a slave device's MOSI pin, the slave device returns data from its MISO pin to the master device's MISO pin. This means that data are exchanged between master and slave via full-duplex communication, with data output and input operations synchronized by the same clock signal. After end of transfer, the transmit byte in 8 bit shift register is replaced with the receive byte.

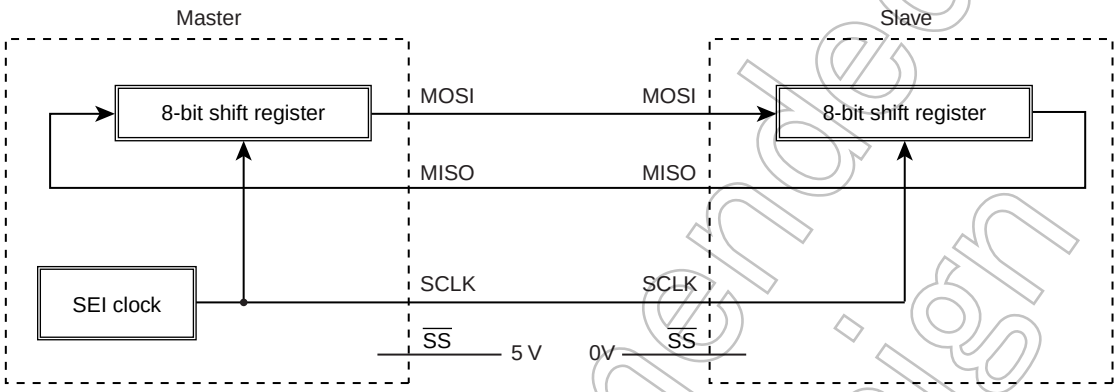

Figure 11-4 Master and Slave Connection in SEI

Not Recommended for New Design

11.7 Interrupt Generation

The SEI for the TMP86P807NG uses INTSEI1. When the SESR<SEF> changes state from “0” to “1”, respective interrupts is generated.

Table 11-6 SEI Interrupt

SEI interrupt channel 1 (INTSEI1)	Interrupt generated for SEF

11.8 SEI System Errors

The SEI has the facility to detect following two system errors.

- Write collision error:

  When the SEDR register is accessed for write during transfer.
- Overflow error:

  When the new data byte is shift in before the previous data byte is read in slave mode.

11.8.1 Write collision error

Collision of writes occurs when an attempt is made to write to the SEDR register while transfer is in progress. Because the SEDR register is not configured as dual-buffers when sending data, a write to the SEDR register directly results in writing to the SEI shift register. Therefore, writing to the SEDR register while transfer is in progress causes a write collision error.

In no case is data transfer stopped in the middle, so that the write data which caused a write collision error will not be written to the shift register. Because slaves cannot control the timing at which the master starts a transfer, collision of writes normally occurs on the slave side.

Write collision errors do not normally occur on the master side because the master has the right to perform a transfer at any time, but in view of SEI logic both the master and slaves have the facility to detect write collision errors.

A write collision error tends to occur on the slave side when the master shifts out data at a speed faster than that at which the slave processes the transferred data. More specifically, a write collision error occurs in cases where the slave transfers a new value to the SEDR register when the master already started a shift cycle for the next byte.

11.8.2 Overflow error

The transfer bit rate on the SEI bus is determined by the master. A high bit rate causes a problem that a slave cannot keep abreast with transfer from the master, because the master is shifting out data faster than can be processed by the slave. The SEI module uses the SOVF flag (SESR<SOVF>) to detect that data has overflowed.

The SOVF flag is set in the following cases:

- When the SEI module is set for slave
- When the old data byte remains to be read while a new data byte has been received

When the SOVF flag is set, the SEDR register is overwritten with a new data byte.

Note: Please carefully examine the communication processing routine and communication rate when designing your application system.

Not Recommended for New Design

11.9 Bus Driver Protection

- One method to protect the device against latch-up due to collision of the bus drivers is the use of an open-drain option. This means changing the SEI pins' CMOS outputs to the open-drain type, which is accomplished by setting the SCLK, MOSI, and MISO pins for open-drain individually by using the each Port Input/output Control Register. In this case, these pins must be provided with pull-up resistors external to the chip.
- When using the SEI pins as CMOS outputs, we recommend connecting them to the bus via resistors in order to protect the device against collision of drivers. However, be sure to select the appropriate resistance value which will not affect actual device operation (Example: 1 Ω to several kΩ).

Not Recommended for New Design

12. 8-Bit AD Converter (ADC)

The TMP86P807NG have a 8-bit successive approximation type AD converter.

12.1 Configuration

The circuit configuration of the 8-bit AD converter is shown in Figure 12-1.

It consists of control registers ADCCR1 and ADCCR2, converted value registers ADCDR1 and ADCDR2, a DA converter, a sample-and-hold circuit, a comparator, and a successive comparison circuit.

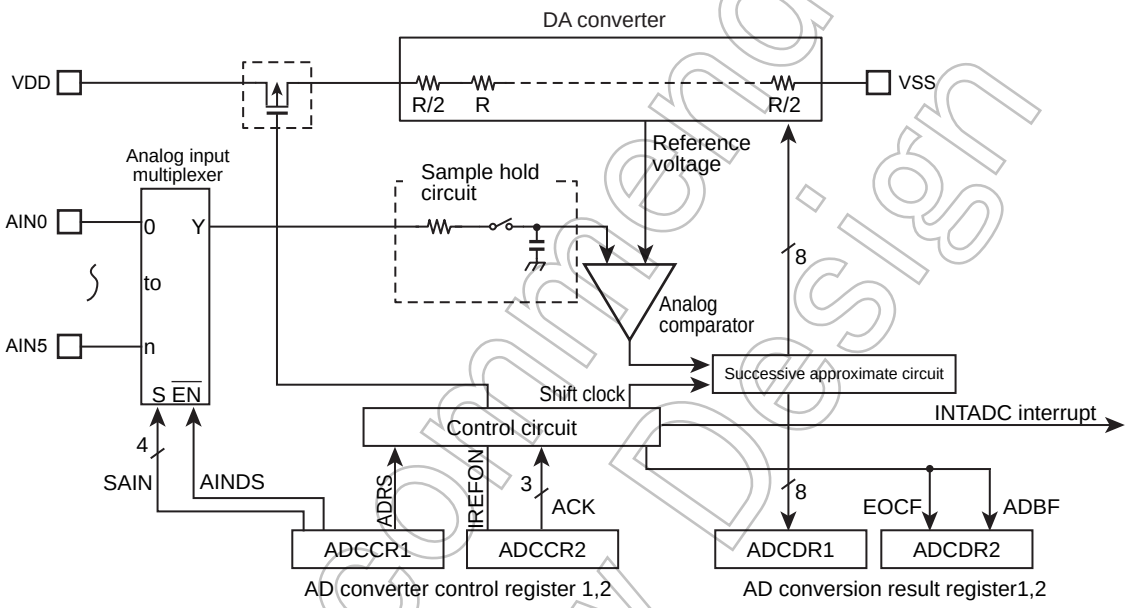

Figure 12-1 8-bit AD Converter (ADC)

Not Recommended for New Design

12.2 Control

The AD converter consists of the following four registers:

1. AD converter control register 1 (ADCCR1)

   This register selects the analog channels in which to perform AD conversion and controls the AD converter as it starts operating.

2. AD converter control register 2 (ADCCR2)

   This register selects the AD conversion time and controls the connection of the DA converter (ladder resistor network).

3. AD converted value register (ADCDR1)

   This register is used to store the digital value after being converted by the AD converter.

4. AD converted value register (ADCDR2)

   This register monitors the operating status of the AD converter.

AD Converter Control Register 1

ADCCR1 (000EH)	7	6	5	4	3	2	1	0	
	ADRS	"0"	"1"	AINDS	SAIN				(Initial value: 0001 0000)

ADRS	AD conversion start	0: – 1: Start	R/W
AINDS	Analog input control	0: Analog input enable 1: Analog input disable	
SAIN	Analog input channel select	0000: AIN0 0001: AIN1 0010: AIN2 0011: AIN3 0100: AIN4 0101: AIN5 0110: Reserved 0111: Reserved 1000: Reserved 1001: Reserved 1010: Reserved 1011: Reserved 1100: Reserved 1101: Reserved 1110: Reserved 1111: Reserved	

Note 1: Select analog input when AD converter stops (ADCDR2<ADBF> = “0”).

Note 2: When the analog input is all use disabling, the ADCCR1<AINDS> should be set to “1”.

Note 3: During conversion, do not perform output instruction to maintain a precision for all of the pins. And port near to analog input, do not input intense signaling of change.

Note 4: The ADRS is automatically cleared to “0” after starting conversion.

Note 5: Do not set ADCCR1<ADRS> newly again during AD conversion. Before setting ADCCR1<ADRS> newly again, check ADCDR2<EOCF> to see that the conversion is completed or wait until the interrupt signal (INTADC) is generated (e.g., interrupt handling routine).

Note 6: After STOP or SLOW/SLEEP mode are started, AD converter control register 1 (ADCCR1) is all initialized and no data can be written in this register. Therefore, to use AD converter again, set the ADCCR1 newly after returning to NORMAL1 or NORMAL2 mode.

Note 7: Always set bit 5 in ADCCR1 to “1” and set bit 6 in ADCCR1 to “0”.

Not Recommended for New Design

AD Converter Control Register 2

ADCCR2 (000FH)	7	6	5	4	3	2	1	0	
			IREFON	"1"	ACK			"0"	(Initial value: **0* 000*)

IREFON	DA converter (ladder resistor) connection control	0: Connected only during AD conversion 1: Always connected	R/W
ACK	AD conversion time select	000: 39/fc 001: Reserved 010: 78/fc 011: 156/fc 100: 312/fc 101: 624/fc 110: 1248/fc 111: Reserved	R/W

Note 1: Always set bit 0 in ADCCR2 to "0" and set bit 4 in ADCCR2 to "1".

Note 2: When a read instruction for ADCCR2, bit 6 to 7 in ADCCR2 read in as undefined data.

Note 3: After STOP or SLOW/SLEEP mode are started, AD converter control register 2 (ADCCR2) is all initialized and no data can be written in this register. Therefore, to use AD converter again, set the ADCCR2 newly after returning to NORMAL1 or NORMAL2 mode.

Table 12-1 Conversion Time according to ACK Setting and Frequency

Condition ACK	Conbersion time'	16MHz	8MHz	4 MHz	2 MHz	10MHz	5 MHz	2.5 MHz
000	39/fc	-	-	-	19.5 μs	-	-	15.6 μs
001	Reserved							
010	78/fc	-	-	19.5 μs	39.0 μs	-	15.6 μs	31.2 μs
011	156/fc	-	19.5 μs	39.0 μs	78.0 μs	15.6 μs	31.2 μs	62.4 μs
100	312/fc	19.5 μs	39.0 μs	78.0 μs	156.0 μs	31.2 μs	62.4 μs	124.8 μs
101	624/fc	39.0 μs	78.0 μs	156.0 μs	-	62.4 μs	124.8 μs	-
110	1248/fc	78.0 μs	156.0 μs	-	-	124.8 μs	-	-
111	Reserved							

Note 1: Settings for "–" in the above table are inhibited.

Note 2: Set conversion time by Supply Voltage(VDD) as follows.

- VDD = 4.5 to 5.5 V (15.6 μs or more)
- VDD = 2.7 to 5.5 V (31.2 μs or more)

AD Conversion Result Register

ADCDR1 (0020H)	7	6	5	4	3	2	1	0	
	AD07	AD06	AD05	AD04	AD03	AD02	AD01	AD00	(Initial value: 0000 0000)

AD Conversion Result Register

ADCDR2 (0021H)	7	6	5	4	3	2	1	0	
			EOCF	ADBF					(Initial value: **00 ****)

EOCF	AD conversion end flag	0: Before or during conversion 1: Conversion completed	Read only
ADBF	AD conversion busy flag	0: During stop of AD conversion 1: During AD conversion	

Note 1: The ADCDR2<EOCF> is cleared to "0" when reading the ADCDR1.
Therefore, the AD conversion result should be read to ADCDR2 more first than ADCDR1.

Note 2: ADCDR2<ADBF> is set to "1" when AD conversion starts and cleared to "0" when the AD conversion is finished. It also is cleared upon entering STOP or SLOW mode.

Note 3: If a read instruction is executed for ADCDR2, read data of bits 7, 6 and 3 to 0 are unstable.

Not Recommended for New Design

12.3 Function

12.3.1 AD Conveter Operation

When ADCCR1<ADRS> is set to "1", AD conversion of the voltage at the analog input pin specified by ADCCR1<SAIN> is thereby started.

After completion of the AD conversion, the conversion result is stored in AD converted value registers (ADCDR1) and at the same time ADCDR2<EOCF> is set to “1”, the AD conversion finished interrupt (INTADC) is generated.

ADCCR1<ADRS> is automatically cleared after AD conversion has started. Do not set ADCCR1<ADRS> newly again (restart) during AD conversion. Before setting ADRS newly again, check ADCDR<EOCF> to see that the conversion is completed or wait until the interrupt signal (INTADC) is generated (e.g., interrupt handling routine).

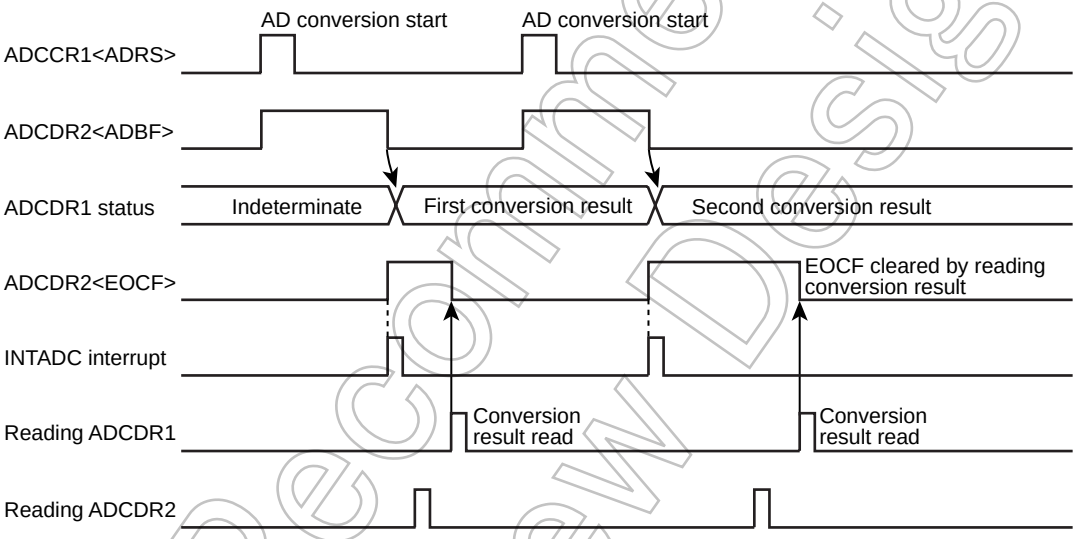

Figure 12-2 AD Converter Operation

12.3.2 AD Converter Operation

1. Set up the AD converter control register 1 (ADCCR1) as follows:
   - Choose the channel to AD convert using AD input channel select (SAIN).
   - Specify analog input enable for analog input control (AINDS).
2. Set up the AD converter control register 2 (ADCCR2) as follows:
   - Set the AD conversion time using AD conversion time (ACK). For details on how to set the conversion time, refer to Table 12-1.
   - Choose IREFON for DA converter control.
3. After setting up 1. and 2. above, set AD conversion start (ADRS) of AD converter control register 1 (ADCCR1) to “1”.
4. After an elapse of the specified AD conversion time, the AD converted value is stored in AD converted value register 1 (ADCDR1) and the AD conversion finished flag (EOCF) of AD converted value register 2 (ADCDR2) is set to “1”, upon which time AD conversion interrupt INTADC is generated.
5. EOCF is cleared to “0” by a read of the conversion result. However, if reconverted before a register read, although EOCF is cleared the previous conversion result is retained until the next conversion is completed.

Not Recommended for New Design

Example :After selecting the conversion time of 19.5 μs at 16 MHz and the analog input channel AIN3 pin, perform AD conversion once. After checking EOCF, read the converted value and store the 8-bit data in address 009FH on RAM.

```
                ; AIN SELECT
                :                 :                 ; Before setting the AD converter register, set each port reg-
                :                 :                 ister suitably (For detail, see chapter of I/O port.)
                LD                (ADCCR1), 00100011B ; Select AIN3
                LD                (ADCCR2), 11011000B ; Select conversion time (312/fc) and operation mode
                ; AD CONVERT START
                SET               (ADCCR1). 7         ; ADRS = 1
SLOOP:          TEST              (ADCDR2). 5         ; EOCF = 1 ?
                JRS               T, SLOOP
                ; RESULT DATA READ
                LD                A, (ADCDR1)
                LD                (9FH), A
```

12.3.3 STOP and SLOW Mode during AD Conversion

When the STOP or SLOW mode is entered forcibly during AD conversion, the AD convert operation is suspended and the AD converter is initialized (ADCCR1 and ADCCR2 are initialized to initial value.). Also, the conversion result is indeterminate. (Conversion results up to the previous operation are cleared, so be sure to read the conversion results before entering STOP or SLOW mode.) When restored from STOP or SLOW mode, AD conversion is not automatically restarted, so it is necessary to restart AD conversion. Note that since the analog reference voltage is automatically disconnected, there is no possibility of current flowing into the analog reference voltage.

Not Recommended for New Design

12.3.4 Analog Input Voltage and AD Conversion Result

The analog input voltage is corresponded to the 8-bit digital value converted by the AD as shown in Figure 12-3.

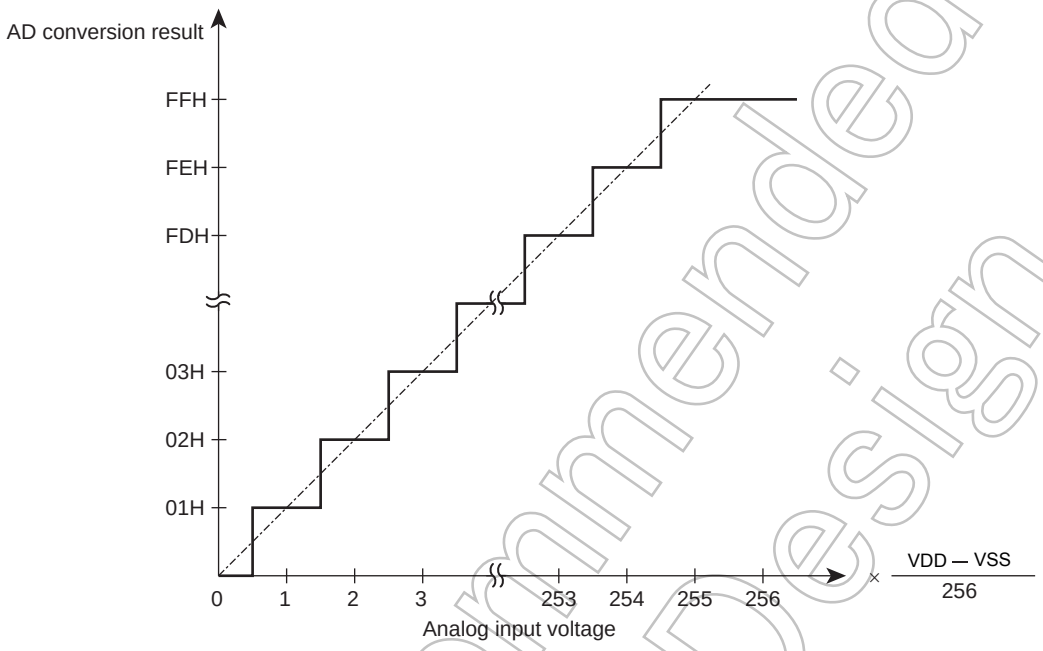

Figure 12-3 Analog Input Voltage and AD Conversion Result (typ.)

Not Recommended for New Design

12.4 Precautions about AD Converter

12.4.1 Analog input pin voltage range

Make sure the analog input pins (AIN0 to AIN5) are used at voltages within VSS below VDD. If any voltage outside this range is applied to one of the analog input pins, the converted value on that pin becomes uncertain. The other analog input pins also are affected by that.

12.4.2 Analog input shared pins

The analog input pins (AIN0 to AIN5) are shared with input/output ports. When using any of the analog inputs to execute AD conversion, do not execute input/output instructions for all other ports. This is necessary to prevent the accuracy of AD conversion from degrading. Not only these analog input shared pins, some other pins may also be affected by noise arising from input/output to and from adjacent pins.

12.4.3 Noise countermeasure

The internal equivalent circuit of the analog input pins is shown in Figure 12-4. The higher the output impedance of the analog input source, more easily they are susceptible to noise. Therefore, make sure the output impedance of the signal source in your design is 5 kΩ or less. Toshiba also recommends attaching a capacitor external to the chip.

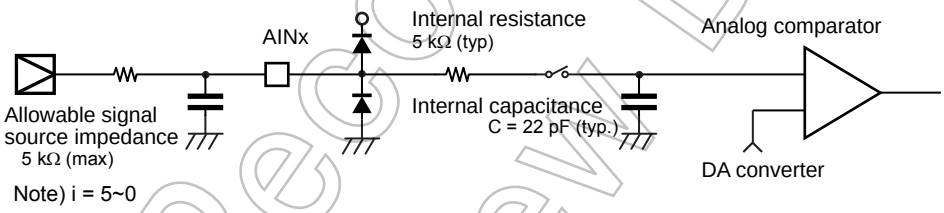

Figure 12-4 Analog Input Equivalent Circuit and Example of Input Pin Processing

Not Recommended for New Design

Not Recommended for New Design

13. Key-on Wakeup (KWU)

TMP86P807NG have four pins P34 to P37, in addition to the P20 ($\overline{INT5}/\overline{STOP}$) pin, that can be used to exit STOP mode.

When using these P34 to P37 pin's input to exit STOP mode, pay attention to the logic of P20 pin. In details, refer to the following section" 13.2 Control ".

13.1 Configuration

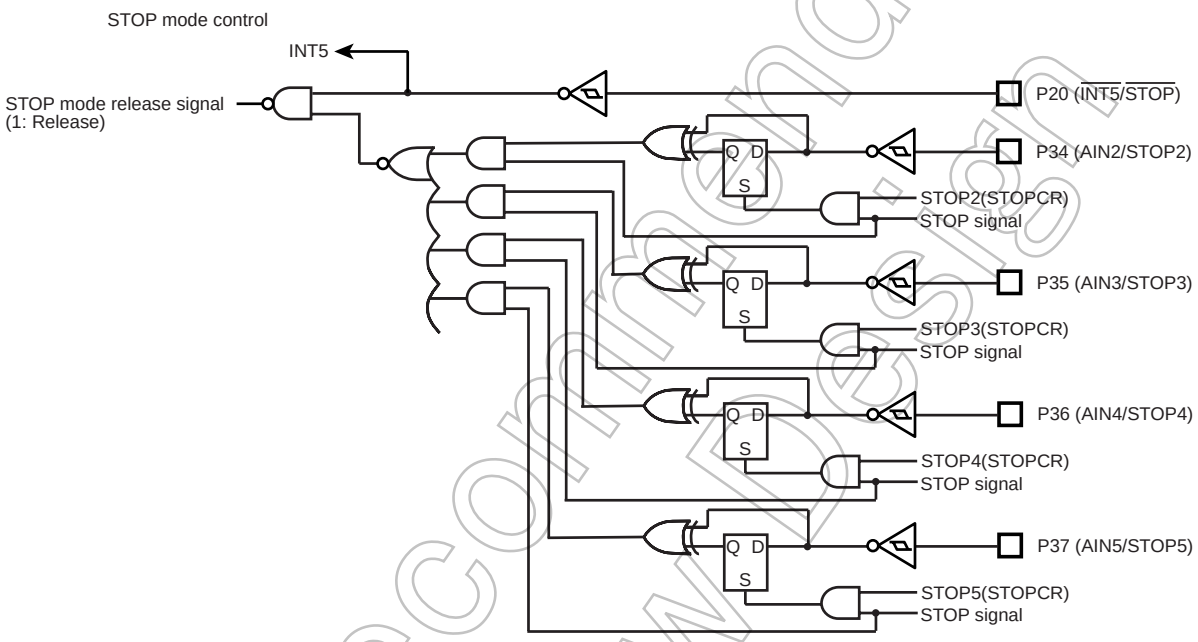

Figure 13-1 Key-on Wakeup Circuit

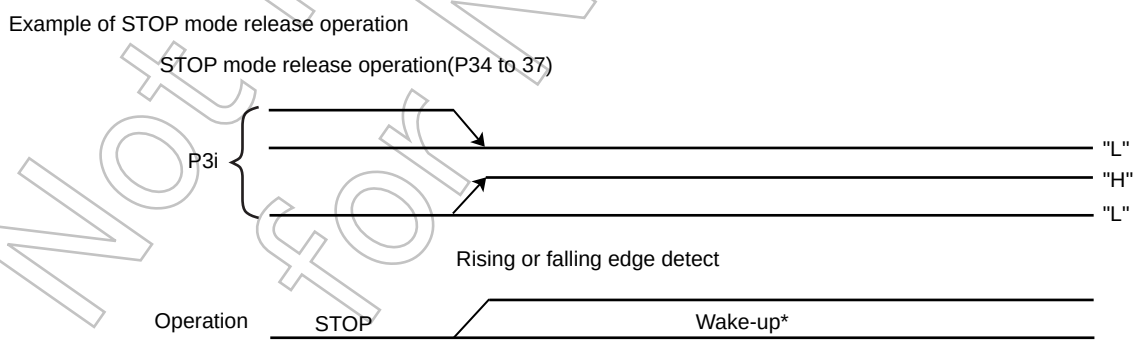

* : The time required for wakeup from releasing STOP mode includes the warming-up time. For details, refer to section "Control of Operation Modes".

Figure 13-2 Example of STOP Mode Release Operation

Not Recommended for New Design

13.2 Control

The P34 to P37 (STOP2 to STOP5) pins can individually be disabled/enabled using Key-on Wakeup Control Register (STOPCR). Before these pins can be used to place the device out of STOP mode, they must be set for input using the P3 Port Input/Output Register (P3CR), P3Port Output Latch (P3DR), AD Control Register (ADCCR1).

STOP mode can be entered by setting up the System Control Register (SYSCR1), and can be released by detecting the active edge (rising or falling edge) on any STOP2 to STOP5 pins which are available for STOP mode release.

Note: When using Key-on Wakeup function, select level mode (set SYSCR1<RELM> to "1") for selection of STOP mode release method.

Although P20 pin is shared with $\overline{\text{INT5}}$ and $\overline{\text{STOP}}$ pin input, use mainly $\overline{\text{STOP}}$ pin to release STOP mode. This is because Key-on Wakeup function is comprised of $\overline{\text{STOP}}$ pin and STOP2 to STOP5 pins as shown in the configuration diagram.

Note 1: When STOP mode release by an edge on STOP pin, follow one of the two methods described below.
(1) Disable all of STOP2 to 5 pin inputs.
(2) Fix STOP2 to 5 pin inputs high or low level.

Note 2: When using key-on wakeup (STOP2 to 5 pins) to exit STOP mode, make sure $\overline{\text{STOP}}$ pin is held low and STOP2 to 5 pin inputs are held high or low level, because STOP mode release signal is created by ORing the $\overline{\text{STOP}}$ pin input and the STOP2 to 5 pin input together.

Key-on Wakeup STOP Mode Control Register

STOPCR	7	6	5	4	3	2	1	0	
(0031H)	STOP5	STOP4	STOP3	STOP2					(Initial value : 0000 ****)

STOP2	STOP mode release by P34 (STOP2)	0: Disable 1: Enable	Write only
STOP3	STOP mode release by P35 (STOP3)	0: Disable 1: Enable	
STOP4	STOP mode release by P36 (STOP4)	0: Disable 1: Enable	
STOP5	STOP mode release by P37 (STOP5)	0: Disable 1: Enable	

<Example of STOP mode release>
The device is released from STOP mode in the following condition.

	P20($\overline{\text{STOP}}$)	P3x
STOP mode release using P3x (STOP2 to 5)	Level detection mode: Low Edge detection mode: Disable	Edge detection Rising or falling edge
STOP mode release using P20 ($\overline{\text{STOP}}$)	Level detection mode: High Edge detection mode: Rising edge	STOPCR: inhibited

Note: Assertion of the STOP mode release signal is not recognized within three instruction cycles after executing the STOP instruction.

Not Recommended for New Design

14. OTP operation

This section describes the funstion and basic operationalblocks of TMP86P807NG. The TMP86P807NG has PROM in place of the mask ROM which is included in the TMP86C407/807NG. The configuration and function are the same as the TMP86C407/807NG. In addition, TMP86P807NG operates as the single clock mode when releasing reset. When using the dual clock mode, oscillate a low-frequency clock by [SET. (SYSCR2). XTEN] command at the beginning of program.

14.1 Operating mode

The TMP86P807NG has MCU mode and PROM mode.

14.1.1 MCU mode

The MCU mode is set by fixing the TEST/VPP pin to the low level. (TEST/VPP pin cannot be used open because it has no built-in pull-down resistor).

14.1.1.1 Program Memory

The TMP86P807NG has 8K bytes built-in one-time-PROM (addresses E000 to FFFFH in the MCU mode, addresses 0000 to 1FFFH in the PROM mode).
When using TMP86P807NG for evaluation of mask ROM products, the program is written in the program storing area shown in Figure 14-1.

Since the TMP86P807NG supports several mask ROM sizes, check the difference in memory size and program storing area between the one-time PROM and the mask ROM to be used.

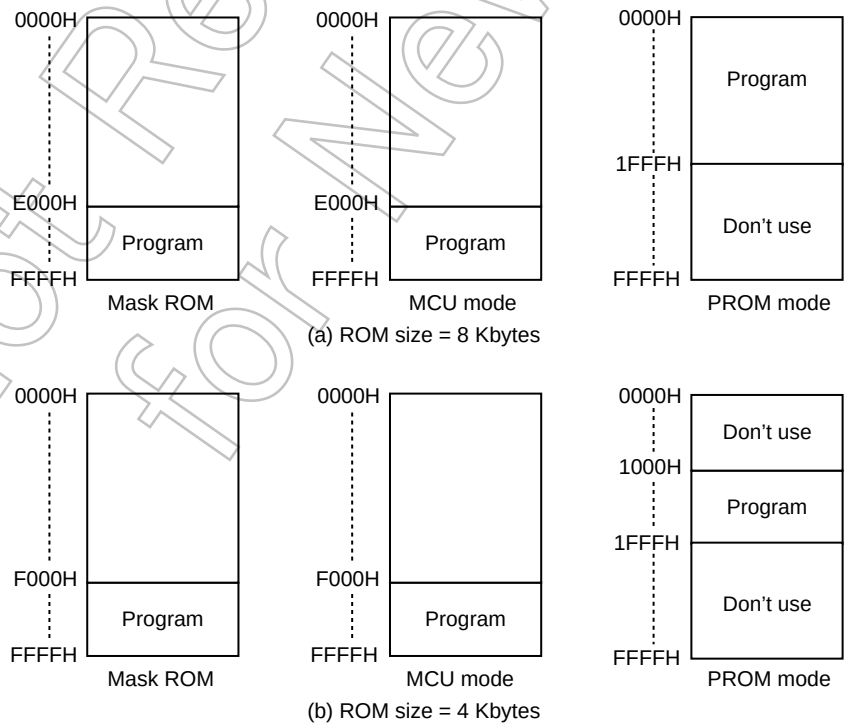

Figure 14-1 Program Memory Area

Not Recommended for New Design

Note: The area that is not in use should be set data to FFH, or a general-purpose PROM programmer should be set only in the program memory area to access.

14.1.1.2 Data Memory

TMP86P807NG has a built-in 256 bytes Data memory (static RAM).

14.1.1.3 Input/Output Circuiry

1. Control pins

   The control pins of the TMP86P807NG are the same as those of the TMP86C407/807NG except that the TEST pin does not have a built-in pull-down resistor.

2. I/O ports

   The I/O circuitries of the TMP86P807NG I/O ports are the same as those of the TMP86C407/807NG.

14.1.2 PROM mode

The PROM mode is set by setting the $\overline{\text{RESET}}$ pin, TEST pin and other pins as shown in Table 14-1 and Figure 14-2. The programming and verification for the internal PROM is acheived by using a general-purpose PROM programmer with the adaptor socket.

Table 14-1 Pin name in PROM mode

Pin name (PROM mode)	I/O	Function	Pin name (MCU mode)
A16	Input	Program memory address input	P37
A15 to A8	Input	Program memory address input	P07 to P00
A7 to A0	Input	Program memory address input	P07 to P00
D7 to D0	Input/Output	Program memory data input/output	P07 to P00
$\overline{\text{CE}}$	Input	Chip enable signal input	P34
$\overline{\text{OE}}$	Input	Output enable signal input	P33
$\overline{\text{PGM}}$	Input	Program mode signal input	P35
DIDS	Input	PROM mode control signal input	P32
VPP	Power supply	+12.75V/5V (Power supply of program)	TEST
VCC	Power supply	+6.25V/5V	VDD
GND	Power supply	0V	VSS
VCC	Setting pin	Fix to "H" level in PROM mode	P11,P21
GND	Setting pin	Fix to "L" level in PROM mode	P10,P12,P20,P22,P36
$\overline{\text{RESET}}$	Setting pin	Fix to "L" level in PROM mode	$\overline{\text{RESET}}$
XIN (CLK)	Input	Set oscillation with resonator In case of external CLK input, set CLK to XIN and set XOUT to open.	XIN
XOUT	Output		XOUT

Note 1: The high-speed program mode can be used. The setting is different according to the type of PROM programmer to use, refer to each description of PROM programmer.
TMP86P807NG does not support the electric signature mode, apply the ROM type of PROM programmer to TC571000D/AD.

Not Recommended for New Design

Always set the adapter socket switch to the "N" side when using TOSHIBA's adaptor socket.

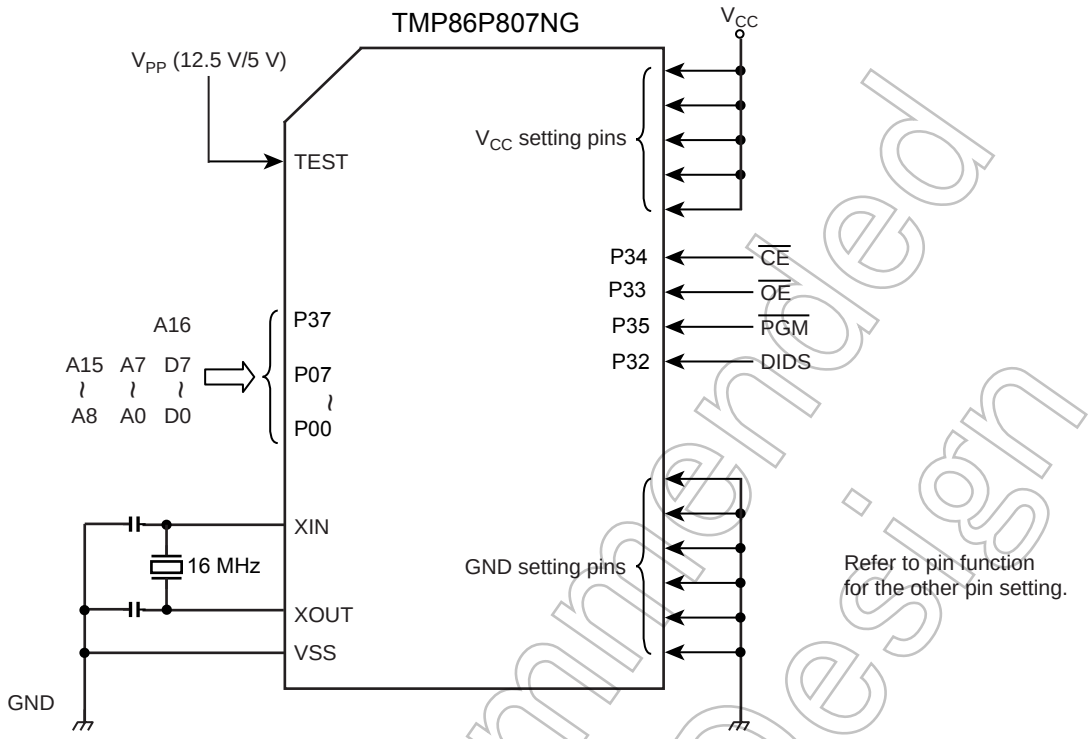

Note 1: EPROM adaptor socket (TC571000 • 1M bit EPROM)
Note 2: PROM programmer connection adaptor sockets
BM11197 for TMP86P807NG

Note 3: Inside pin name for TMP86P807NG
Note 4: Outside pin name for EPROM

Figure 14-2 PROM mode setting

Not Recommended for New Design

14.1.2.1 Programming Flowchart (High-speed program writing)

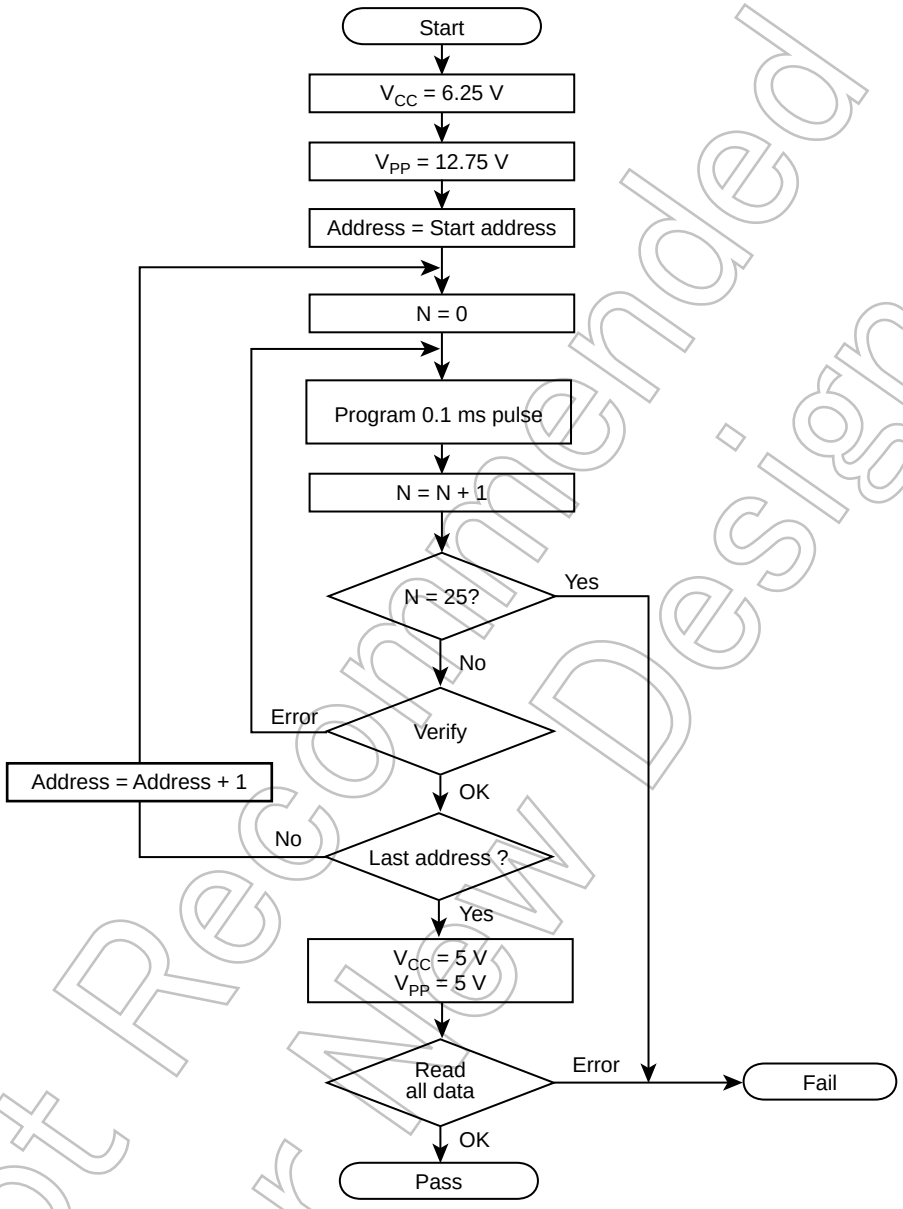

Figure 14-3 Programming Flowchart

The high-speed programming mode is set by applying Vpp=12.75V (programming voltage) to the Vpp pin when the Vcc = 6.25 V. After the address and data are fixed, the data in the address is written by applying 0.1[msec] of low level program pulse to $\overline{PGM}$ pin. Then verify if the data is written.
If the programmed data is incorrect, another 0.1[msec] pulse is applied to $\overline{PGM}$ pin. This programming procedure is repeated until correct data is read from the address (maximum of 25 times).
Subsequently, all data are programmed in all address. When all data were written, verfy all address under the condition Vcc=Vpp=5V.

Not Recommended for New Design

14.1.2.2 Program Writing using a General-purpose PROM Programmer

1. Recommended OTP adaptor

   BM11197 for TMP86P807NG

2. Setting of OTP adaptor

   Set the switch (SW1) to "N" side.

3. Setting of PROM programmer

   a. Set PROM type to TC571000D/AD.

      Vpp: 12.75 V (high-speed program writing mode)

   b. Data transmission (or Copy) (Note 1)

      The PROM of TMP86P807NG is located on different address; it depends on operating mode: MCU mode and PROM mode. When you write the data of ROM for mask ROM products, the data shuold be transferred (or copied) from the address for MCU mode to that for PROM mode before writing operation is executed. For the applicable program areas of MCU mode and PROM mode are different, refer to TMP86P807NG" Figure 14-1 Program Memory Area ".

      Example: In the block transfer (copy) mode, executed as below.

      8KB ROM capacity : 0E000~0FFFFH → 00000~01FFFH

      4KB ROM capacity : 0F000~0FFFFH → 01000~01FFFH

   c. Setting of the program address (Note 1)

      Start address: 0000H (When 4KB ROM capacity, start address is 1000H)

      End address: 1FFFH

4. Writting

   Write and verify according to the above procedure "Setting of PROM programmer".

Note 1: For the setting method, refer to each description of PROM programmer.
Make sure to set the data of address area that is not in use to FFH.

Note 2: When setting MCU to the adaptor or when setting the adaptor to the PROM programmer, set the first pin of the adaptor and that of PROM programmer socket matched. If the first pin is conversely set, MCU or adaptor or programmer would be damaged.

Note 3: The TMP86P807NG does not support the electric signature mode.
If PROM programmer uses the signature, the device would be damaged because of applying voltage of 12±0.5V to pin 9(A9) of the address. Don't use the signature.

Not Recommended for New Design

Not Recommended for New Design

15. Input/Output Circuitry

15.1 Control Pins

The input/output circuitries of the TMP86P807NG control pins are shown below.

Control Pin	I/O	Input/Output Circuitry	Remarks
XIN XOUT	Input Output	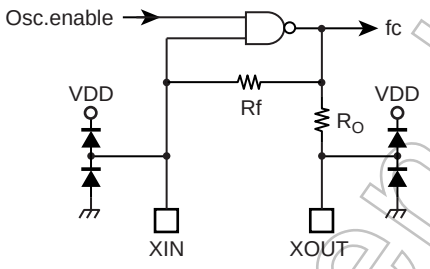	Resonator connecting pins R_f = 1.2 MΩ (typ.) R_O = 0.5 kΩ (typ.)
XTIN XTOUT	Input	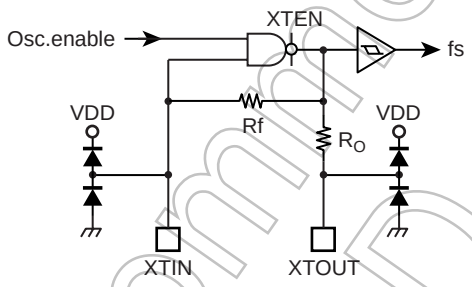	Resonator connecting pins R_f = 6 MΩ (typ.) R_O = 220 kΩ (typ.)
$\overline{\text{RESET}}$	Input	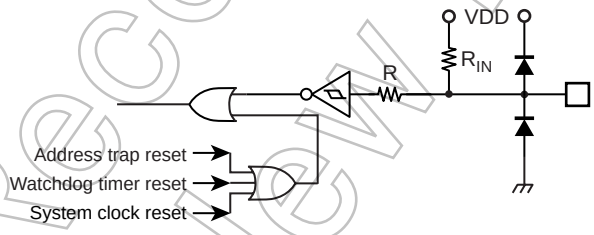	Hysteresis input Pull-up resistor R_{IN} = 220 kΩ (typ.) R = 100 Ω (typ.)
TEST	Input	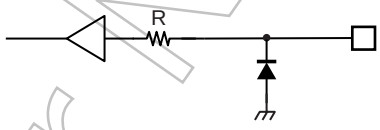	Without Pull-down resistor R = 100 Ω (typ.) Fix the TEST pin at low-level in MCU mode.

Not Recommended for New Design

15.2 Input/Output Ports

Control Pin	I/O	Input/Output Circuitry	Remarks
P0	I/O	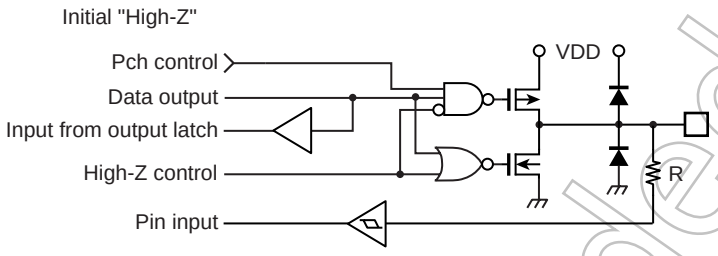	Sink open drain output or Push-Pull output Hysteresis input High current output(Nch) (Programmable port option) R = 100 Ω (typ.)
P1	I/O	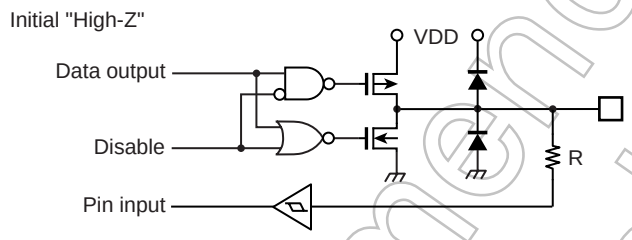	Tri-state I/O Hysteresis input R = 100 Ω (typ.)
P2	I/O	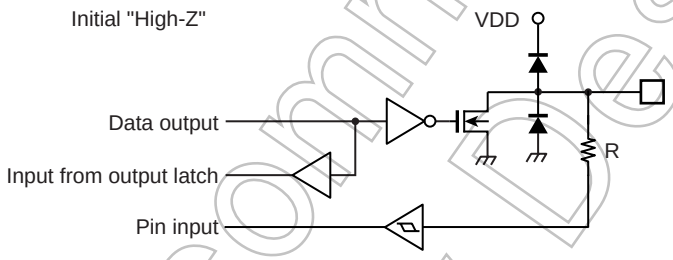	Sink open drain output Hysteresis input R = 100 Ω (typ.)
P3	I/O	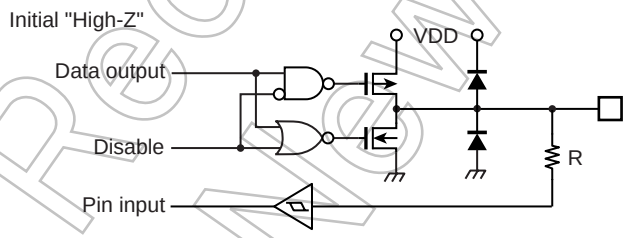	Tri-state I/O Hysteresis input R = 100 Ω (typ.)

Note: Input status on pins set for input mode are read in into the internal circuit. Therefore, when using the ports in a maxture of input and output modes, the contents of the output latches for the ports that are set for input mode may be rewritten by execution of bit manipulating instructions.

Not Recommended for New Design

16. Electrical Characteristics

16.1 Absolute Maximum Ratings

The absolute maximum ratings are rated values which must not be exceeded during operation, even for an instant. Any one of the ratings must not be exceeded. If any absolute maximum rating is exceeded, a device may break down or its performance may be degraded, causing it to catch fire or explode resulting in injury to the user. Thus, when designing products which include this device, ensure that no absolute maximum rating value will ever be exceeded.

(V_{SS} = 0 V)

Parameter	Symbol	Pins	Ratings	Unit
Supply voltage	V_{DD}		−0.3 to 6.5	V
Program voltage	V_{PP}	TEST/V_{PP}	−0.3 to 13.0	V
Input voltage	V_{IN}		−0.3 to V_{DD} + 0.3	V
Output voltage	V_{OUT}		−0.3 to V_{DD} + 0.3	V
Output current (Per 1 pin)	I_{OUT1}	P0, P1, P3 port	−1.8	mA
	I_{OUT2}	P1, P2, P3 port	3.2	mA
	I_{OUT3}	P0 port	30	mA
Output current (Total)	ΣI_{OUT1}	P0, P1, P3 port	−30	mA
	ΣI_{OUT2}	P1, P2, P3 port	60	mA
	ΣI_{OUT3}	P0 port	80	mA
Power dissipation [Topr = 85°C]	P_D	SDIP	300	mW
Soldering temperature (Time)	Tsld		260 (10 s)	°C
Storage temperature	Tstg		−55 to 150	°C
Operating temperature	Topr		−40 to 85	°C

Not Recommended for New Design

16.2 Operating Condition

The Operating Conditions show the conditions under which the device be used in order for it to operate normally while maintaining its quality. If the device is used outside the range of Operating Conditions (power supply voltage, operating temperature range, or AC/DC rated values), it may operate erratically. Therefore, when designing your application equipment, always make sure its intended working conditions will not exceed the range of Operating Conditions.

(V_{SS} = 0 V, Topr = –40 to 85°C)

Parameter	Symbol	Pins	Condition		Min	Max	Unit
Supply voltage	V_{DD}		fc=16MHz	NORMAL 1,2 mode	4.5	5.5	V
				IDLE 0,1,2 mode			
			fc=8MHz	NORMAL 1,2 mode	2.7		
				IDLE 0,1,2 mode			
			fs=32.768 kHz	SLOW 1,2 mode			
				SLEEP 0,1,2 mode			
				STOP mode			
Input high level	V_{IH1}	Except hysteresis input	$V_{DD} \geq 4.5$ V		$V_{DD} \times 0.70$	V_{DD}	V
	V_{IH2}	Hysteresis input			$V_{DD} \times 0.75$		
	V_{IH3}		$V_{DD} < 4.5$ V		$V_{DD} \times 0.90$		
Input low level	V_{IL1}	Except hysteresis input	$V_{DD} \geq 4.5$ V		0	$V_{DD} \times 0.30$	
	V_{IL2}	Hysteresis input				$V_{DD} \times 0.25$	
	V_{IL3}		$V_{DD} < 4.5$ V			$V_{DD} \times 0.10$	
Clock frequency	fc	XIN, XOUT	V_{DD} = 4.5 V to 5.5 V		1.0	16.0	MHz
			V_{DD} = 2.7 V to 5.5 V			8.0	
	fs	XTIN, XTOUT	V_{DD} = 2.7 V to 5.5 V		30	34	kHz

Not Recommended for New Design

16.3 DC Characteristics

(V_{SS} = 0 V, Topr = –40 to 85°C)

Parameter	Symbol	Pins	Condition	Min	Typ.	Max	Unit
Hysteresis voltage	V_{HS}	Hysteresis input		–	0.9	–	V
Input current	I_{IN1}	TEST	V_{DD} = 5.5 V, V_{IN} = 5.5 V/0 V	–	–	±2	μA
	I_{IN2}	Sink open drain, Tri-state port					
	I_{IN3}	$\overline{RESET}$, $\overline{STOP}$					
Input resistance	R_{IN}	$\overline{RESET}$ pull-up		100	220	450	kΩ
Output leakage current	I_{LO}	Sink open drain, Tri-state port	V_{DD} = 5.5 V, V_{OUT} = 5.5 V/0 V	–	–	±2	μA
Output high voltage	V_{OH}	P0, P1, P3 port	V_{DD} = 4.5 V, I_{OH} = –0.7 mA	4.1	–	–	V
Output low voltage	V_{OL}	P1, P2, P3 port	V_{DD} = 4.5 V, I_{OL} = 1.6 mA	–	–	0.4	
Output low current	I_{OL}	High current port (P0 port)	V_{DD} = 4.5 V, V_{OL} = 1.0 V	–	20	–	mA
Supply current in NORMAL 1,2 mode	I_{DD}		V_{DD} = 5.5 V V_{IN} = 5.3 V/0.2 V fc = 16.0 MHz fs = 32.768 kHz	–	7.5	9.0	mA
Supply current in IDLE 0, 1,2 mode				–	5.5	6.5	
Supply current in SLOW 1 mode			V_{DD} = 3.0 V V_{IN} = 2.8 V/0.2 V fs = 32.768 kHz	–	14.0	25.0	μA
Supply current in SLEEP 1 mode				–	7.0	15.0	
Supply current in SLEEP 0 mode				–	6.0	150	
Supply current in STOP mode			V_{DD} = 5.5 V V_{IN} = 5.3 V/0.2 V	–	0.5	10.0	μA

Note 1: Typical values show those at Topr = 25°C, V_{DD} = 5 V

Note 2: Input current (I_{IN1}, I_{IN3}); The current through pull-up or pull-down resistor is not included.

Note 3: I_{DD} does not include I_{REF} current.

Note 4: The power supply current in STOP2 and SLEEP2 modes each are the same as in IDLE0,1 and 2 modes.

Not Recommended for New Design

16.4 AD Conversion Characteristics

(V_{SS} = 0.0 V, V_{DD} = 4.5 to 5.5 V, Topr = –40 to 85°C)

Parameter	Symbol	Condition	Min	Typ.	Max	Unit
Analog input voltage	V_{AIN}		V_{SS}	–	V_{DD}	V
Power supply current of analog reference voltage	I_{REF}	V_{DD} = 5.5 V V_{SS} = 0.0 V	–	0.6	1.0	mA
Non linearity error		V_{DD} = 5.0 V, V_{SS} = 0.0 V	–	–	±1	LSB
Zero point error			–	–	±1	
Full scale error			–	–	±1	
Total error			–	–	±2	

(V_{SS} = 0.0 V, V_{DD} = 2.7 to 4.5 V, Topr = –40 to 85°C)

Parameter	Symbol	Condition	Min	Typ.	Max	Unit
Analog input voltage	V_{AIN}		V_{SS}	–	V_{DD}	V
Power supply current of analog reference voltage	I_{REF}	V_{DD} = 4.5 V V_{SS} = 0.0 V	–	0.5	0.8	mA
Non linearity error		V_{DD} = 2.7 V, V_{SS} = 0.0 V	–	–	±1	LSB
Zero point error			–	–	±1	
Full scale error			–	–	±1	
Total error			–	–	±2	

Note 1: The total error includes all errors except a quantization error, and is defined as a maximum deviation from the ideal conversion line.

Note 2: Conversion time is different in recommended value by power supply voltage.
About conversion time, please refer to “Register Configuration”.

Note 3: Please use input voltage to AIN input Pin in limit of $V_{DD} - V_{SS}$.
When voltage of range outside is input, conversion value becomes unsettled and gives affect to other channel conversion value.

Note 4: The relevant pin for I_{REF} is V_{DD}, so that the current flowing into V_{DD} is the power supply current $I_{DD} + I_{REF}$.

16.5 SEI Operating Condition (Slave mode)

(V_{SS} = 0 V, V_{DD} = 2.7 to 5.5 V, Topr = –40 to 85°C)

Parameter	Symbol	Condition	Min	Typ.	Max	Unit
Transfer rate			15.625k	–	fc/4	bps

Not Recommended for New Design

16.6 AC Characteristics

(V_{SS} = 0 V, V_{DD} = 4.5 to 5.5 V, Topr = –40 to 85°C)

Parameter	Symbol	Condition	Min	Typ.	Max	Unit
Machine cycle time	tcy	NORMAL 1,2 mode	0.25	–	4	μs
		IDLE 0,1,2 mode				
		SLOW 1,2 mode	117.6	–	133.3	
		SLEEP 0,1,2 mode				
High level clock pulse width	t_{WCH}	For external clock operation (XIN input) fc = 16 MHz	25	–	–	ns
Low level clock pulse width	t_{WCL}					
High level clock pulse width	t_{WSH}	For external clock operation (XTIN input) fs = 32.768 kHz	14.7	–	–	μs
Low level clock pulse width	t_{WSL}					

(V_{SS} = 0 V, V_{DD} = 2.7 to 4.5 V, Topr = –40 to 85°C)

Parameter	Symbol	Condition	Min	Typ.	Max	Unit
Machine cycle time	tcy	NORMAL 1,2 mode	0.5	–	4	μs
		IDLE 0,1,2 mode				
		SLOW 1,2 mode	117.6	–	133.3	
		SLEEP 0,1,2 mode				
High level clock pulse width	t_{WCH}	For external clock operation (XIN input) fc = 8 MHz	50	–	–	ns
Low level clock pulse width	t_{WCL}					
High level clock pulse width	t_{WSH}	For external clock operation (XTIN input) fs = 32.768 kHz	14.7	–	–	μs
Low level clock pulse width	t_{WSL}					

Not Recommended for New Design

16.7 DC Characteristics, AC Characteristics (PROM mode)

16.7.1 Read operation in PROM mode

(V_{SS} = 0 V, Topr = –40 to 85°C)

Parameter	Symbol	Condition	Min	Typ.	Max	Unit
High level input voltage	V_{IH4}		$V_{CC} \times 0.75$	–	V_{CC}	V
Low level input voltage	V_{IL4}		0	–	$V_{CC} \times 0.25$	
Power supply	V_{CC}		4.75	5.0	5.25	
Program supply of program	V_{PP}					
Address access time	t_{ACC}	$V_{CC} = 5.0 \pm 0.25$ V	–	–	1.5tcyc + 300	ns
Address input cycle	–		–	tcyc	–	

Note: tcyc = 250 ns, f_{CLK} = 16 MHz

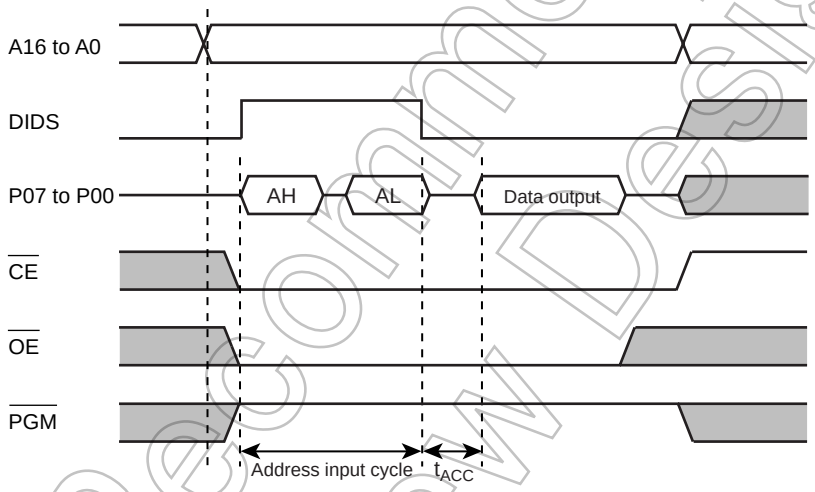

Note: DIDS and P07 to P00 are the signals for the TMP86P807NG.
All other signals are EPROM programmable.
AL: Address input (A0 to A7)
AH: Address input (A8 to A15)

Not Recommended for New Design

16.7.2 Program operation (High-speed) (Topr = 25 ± 5°C)

Parameter	Symbol	Condition	Min	Typ.	Max	Unit
High level input voltage	V_{IH4}		$V_{CC} \times 0.75$	–	V_{CC}	V
Low level input voltage	V_{IL4}		0	–	$V_{CC} \times 0.25$	
Power supply	V_{CC}		6.0	6.25	6.5	
Program supply of program	V_{PP}		12.5	12.75	13.0	
Pulse width of initializing program	t_{PW}	V_{CC} = 6.0 V	0.095	0.1	0.105	ms
Address set up time	t_{AS}		0.5tcyc	–	–	ns
Address input cycle	–		–	tcyc	–	
Data set up time	t_{DS}		1.5tcyc	–	–	
$\overline{OE}$ to valid output data	t_{OE}		–	–	1.5tcyc + 300	

Note: tcyc = 250 ns, f_{CLK} = 16 MHz

High-speed program writing

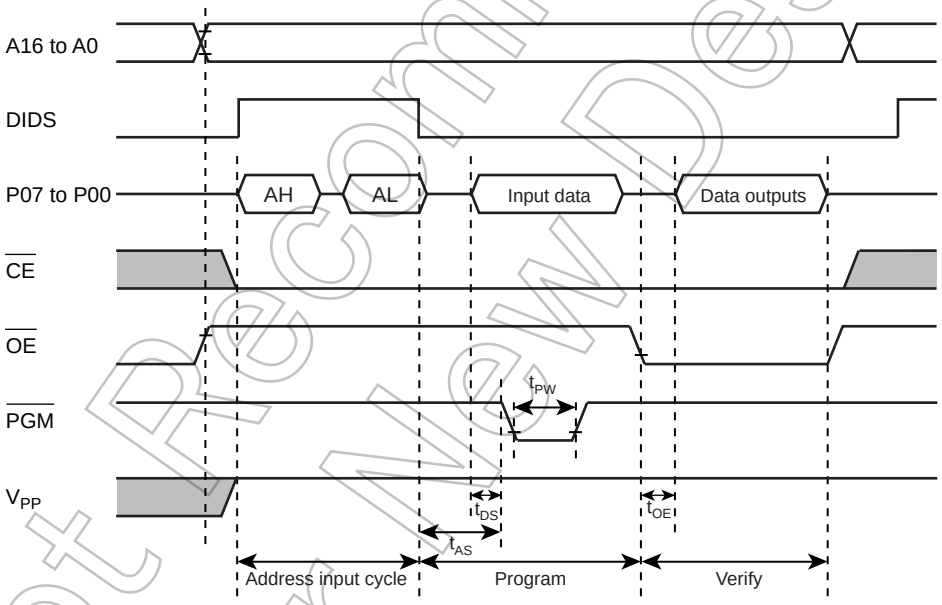

Note: DIDS and P07 to P00 are the signals for the TMP86P807NG.
All other signals are EPROM programmable.
AL: Address input (A0 to A7)
AH: Address input (A8 to A15)

Note 1: The power supply of V_{PP} (12.75 V) must be set power-on at the same time or the later time for a power supply of V_{CC} and must be clear power-on at the same time or early time for a power supply of V_{CC}.

Note 2: The pulling up/down device on the condition of V_{PP} = 12.75 V ± 0.25 V causes a damage for the device. Do not pull up/down at programming.

Note 3: Use the recommended adapter and mode.
Using other than the above condition may cause the trouble of the writting.

Not Recommended for New Design

16.8 Recommended Oscillation Conditions

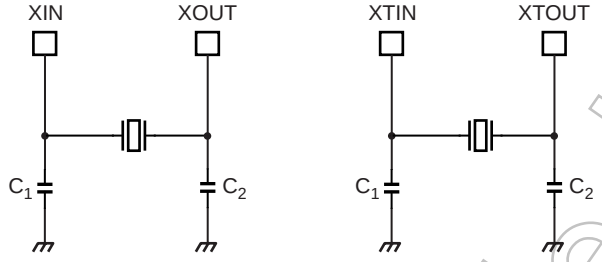

(1) High-frequency oscillation (2) Low-frequency oscillation

Note 1: To ensure stable oscillation, the resonator position, load capacitance, etc. must be appropriate. Because these factors are greatly affected by board patterns, please be sure to evaluate operation on the board on which the device will actually be mounted.

Note 2: For the resonators to be used with Toshiba microcontrollers, we recommend ceramic resonators manufactured by Murata Manufacturing Co., Ltd.
For details, please visit the website of Murata at the following URL:
http://www.murata.com

16.9 Handling Precaution

- The solderability test conditions for lead-free products (indicated by the suffix G in product name) are shown below.
  1. When using the Sn-37Pb solder bath
     Solder bath temperature = 230 °C
     Dipping time = 5 seconds
     Number of times = once
     R-type flux used
  2. When using the Sn-3.0Ag-0.5Cu solder bath
     Solder bath temperature = 245 °C
     Dipping time = 5 seconds
     Number of times = once
     R-type flux used

  Note: The pass criteron of the above test is as follows:
  Solderability rate until forming ≥ 95 %
- When using the device (oscillator) in places exposed to high electric fields such as cathode-ray tubes, we recommend electrically shielding the package in order to maintain normal operating condition.

Not Recommended for New Design

17. Package Dimensions

SDIP28-P-400-1.78 Rev 01

Unit: mm

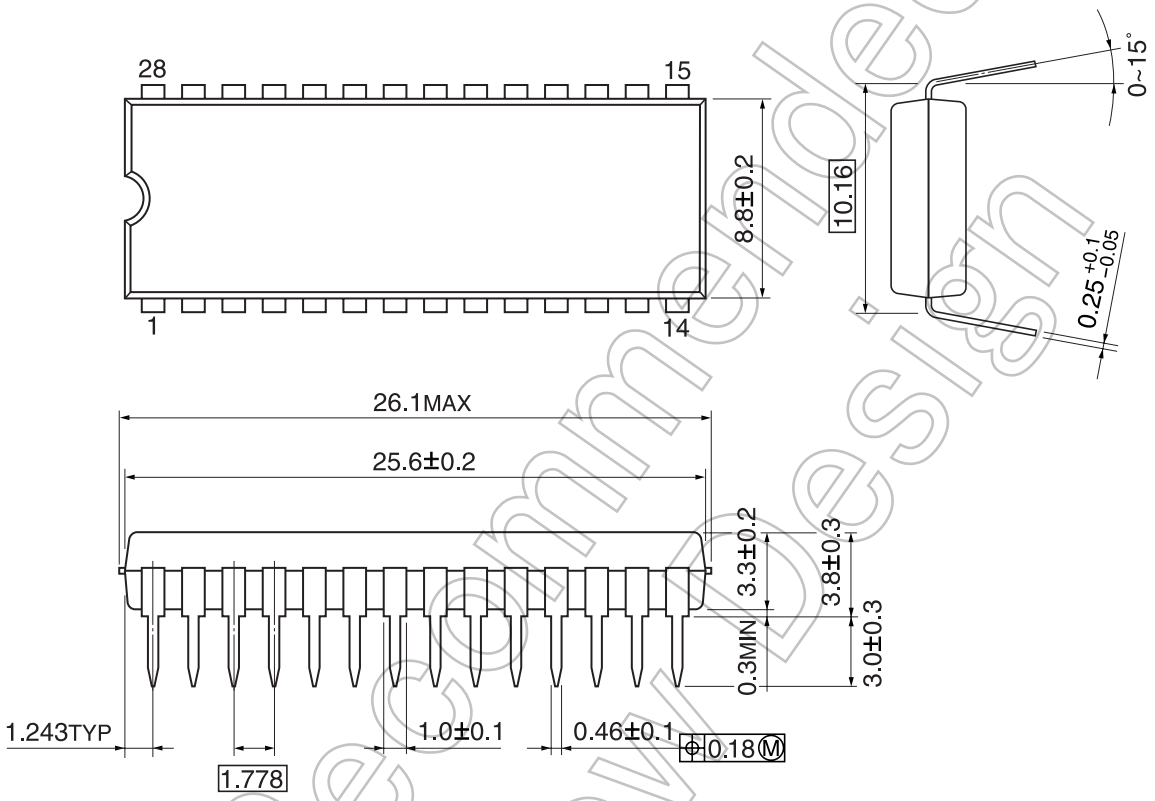

Not Recommended for New Design

Not Recommended for New Design

This is a technical document that describes the operating functions and electrical specifications of the 8-bit microcontroller series TLCS-870/C (LSI).

Toshiba provides a variety of development tools and basic software to enable efficient software development.

These development tools have specifications that support advances in microcomputer hardware (LSI) and can be used extensively. Both the hardware and software are supported continuously with version updates.

The recent advances in CMOS LSI production technology have been phenomenal and microcomputer systems for LSI design are constantly being improved. The products described in this document may also be revised in the future. Be sure to check the latest specifications before using.

Toshiba is developing highly integrated, high-performance microcomputers using advanced MOS production technology and especially well proven CMOS technology.

We are prepared to meet the requests for custom packaging for a variety of application areas.
We are confident that our products can satisfy your application needs now and in the future.

Not Recommended for New Design

Not Recommended
for New Design