Package dimension

Unit: mm

QFP64-P-1414-0.80A

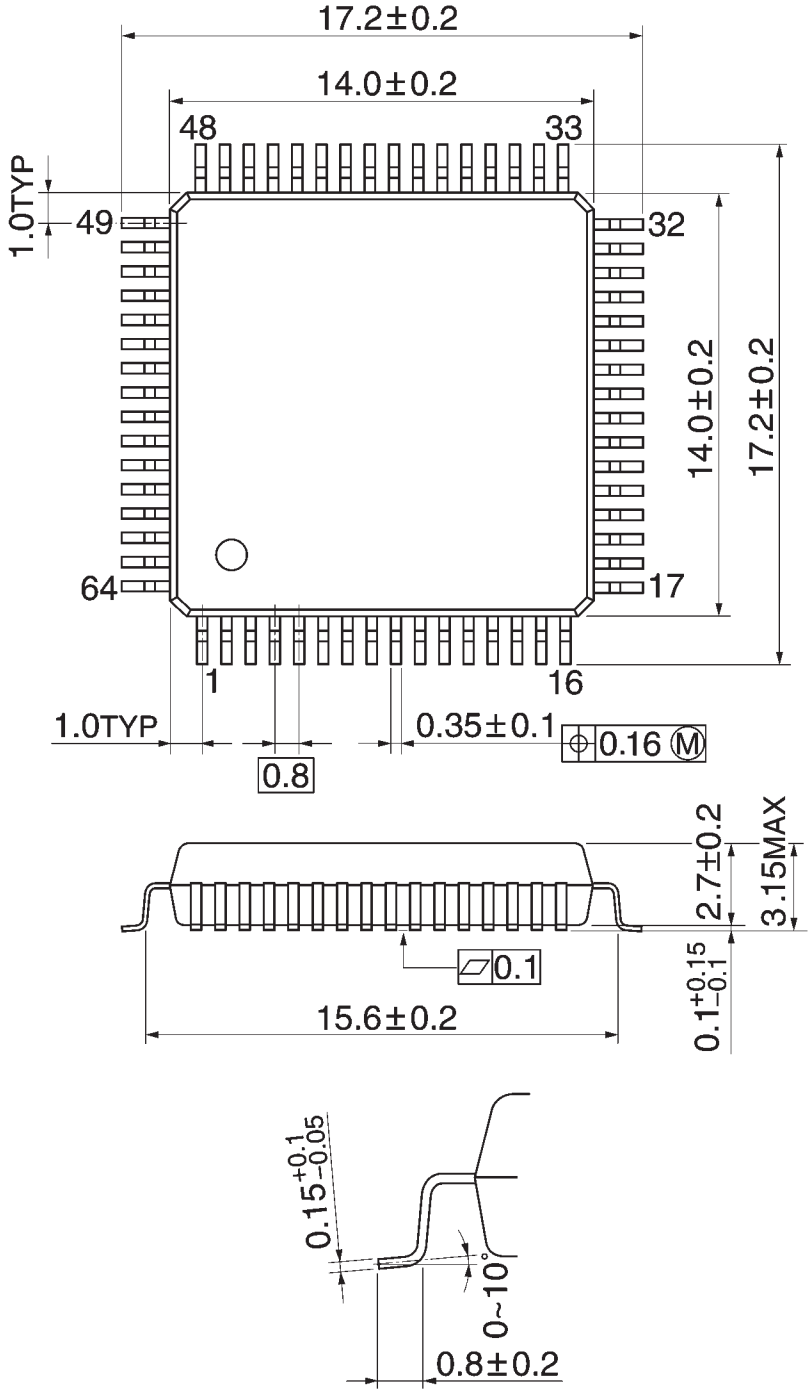

Note) The drawing is package outline.
If you have some question about the detail dimensions, please contact us.

Rev01