High-Power Module　Silicon Carbide N-Channel MOSFET

IX1500YF2YMS3

1. Applications

- High-Power Switching
- Motor Controllers (including rail traction)

2. Features

(1) V_{DSS} = 2300 V, I_D = 1500 A All SiC MOSFET Module(Low loss & High speed switching)
(2) Low stray inductance, low thermal resistance, maximum T_{ch} = 175 ℃
(3) Equipped with current sensing terminal & build in thermistor
(4) New generation standard package(Compact & easily handled by paralleling)
(5) Electrodes are isolated from metal base plate.

3. Packaging and Internal Circuit (Note)

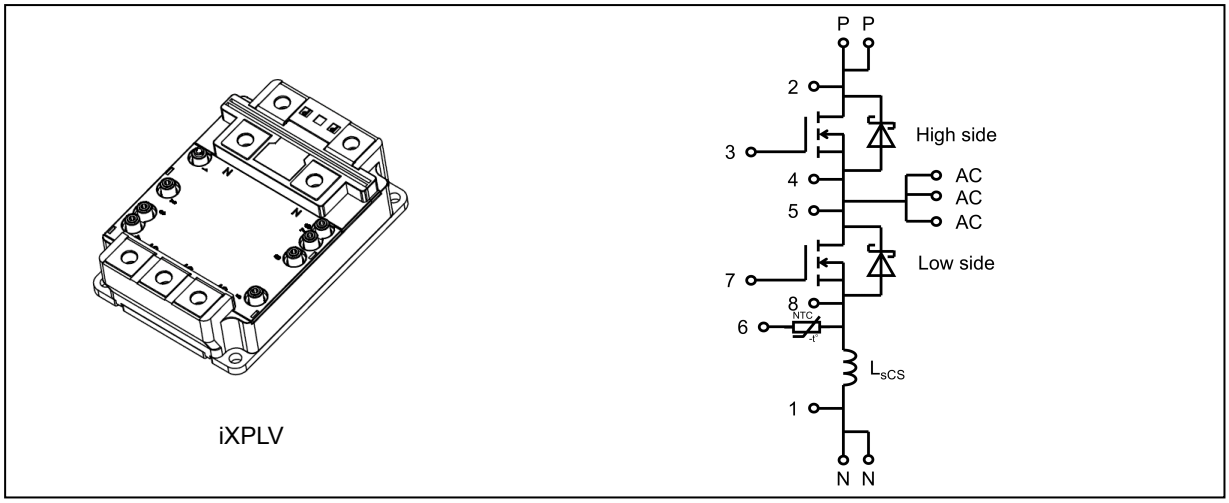

(Note) P and N terminals should be fastened by two screws each and AC terminals should be fastened by three screws.

Start of commercial production
2026-09

©2026
Toshiba Electronic Devices & Storage Corporation

4. Terminal

Terminal No.	Connection
P	P (main terminal)
N	N (main terminal)
AC	AC (main terminal)
1	N (sense) / Current sense
2	P (sense)
3	High side gate
4	High side source sense
5	AC (sense)
6	Thermistor
7	Low side gate
8	Low side source sense

Marking	High side	Low side
A	MOSFET	MOSFET

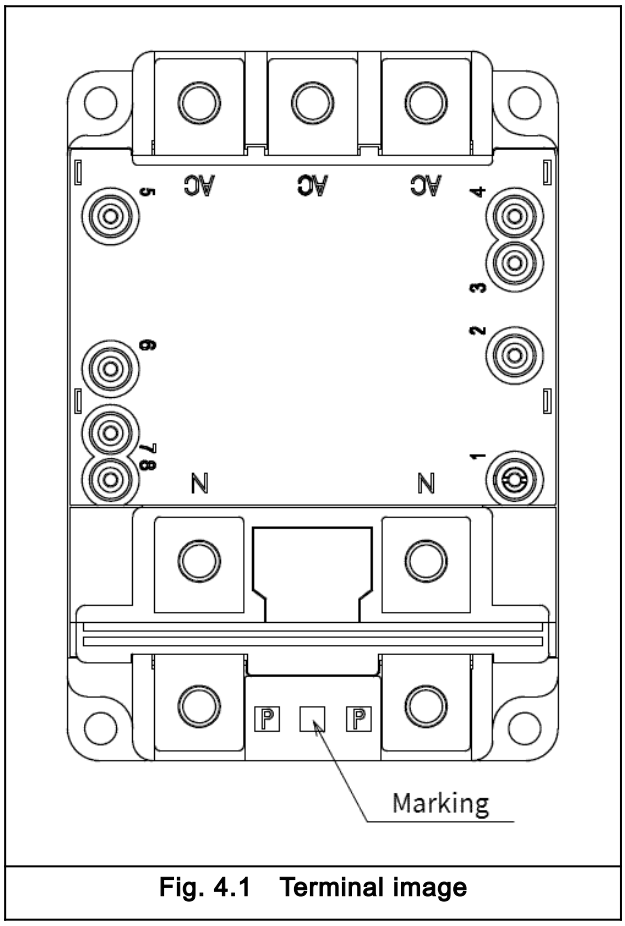

Fig. 4.1 Terminal image

5. Absolute Maximum Ratings (Note, Note 1) (T_C = 25 °C, unless otherwise specified)

Characteristics	Symbol	Note	Test Condition	Rating	Unit
Drain-source voltage	V_{DSS}			2300	V
Gate-source voltage	V_{GSS}			+ 25 / - 10	V
Drain current (DC)	I_D	(Note 2)		1500	A
Drain current (pulsed)	I_{DP}	(Note 2)		3000	A
Power dissipation	P_D	(Note 2)		6000	W
Source current (DC)	I_S	(Note 2)		1500	A
Source current (pulsed)	I_{SP}	(Note 2)	V_{GS} = 20 V	3000	A
Source current (pulsed)	I_{SP}		T_{ch} = -40 to 135 °C, V_{GS} = -6 V	3000	A
Source current (pulsed)	I_{SP}		T_{ch} = 135 to 175 °C, V_{GS} = -6 V	2000	A
Channel temperature	T_{ch}			175	°C
Storage temperature	T_{stg}			- 40 to 150	°C
Isolation voltage	V_{isol}		AC , 60 s	6000	Vrms
Mounting torque	TOR	(Note 3)	Main terminal: M8	9.1	N · m
		(Note 4)	Signal terminal: M3	1.0	N · m
	TOR	(Note 5)	Mounting: M6	5.2	N · m

Note: Using continuously under heavy loads (e.g. the application of high temperature/current/voltage and the significant change in temperature, etc.) may cause this product to decrease in the reliability significantly even if the operating conditions (i.e. operating temperature/current/voltage, etc.) are within the absolute maximum ratings.
Please design the appropriate reliability upon reviewing the Toshiba Semiconductor Reliability Handbook ("Handling Precautions"/"Derating Concept and Methods") and individual reliability data (i.e. reliability test report and estimated failure rate, etc).

Note 1: refer to the application notes.
Note 2: Ensure that the channel temperature does not exceed 175 °C.
Note 3: The recommended tightening torque for the main terminal (M8) is 7.0 N · m.
Note 4: The recommended tightening torque for the signal terminal (M3) is 0.8 N · m.
Note 5: The recommended tightening torque for installation (M6) is 4.0 N · m.

6. Thermal Characteristics

Characteristics	Symbol	Note	Min	Typ.	Max	Unit
Thermal resistance (channel-to-case)	$R_{th(ch-c)}$	(Note 1)	—	—	0.025	K/W
Thermal resistance (case-to-fin)	$R_{th(c-f)}$	(Note 2)	—	0.0026	—	K/W

Note 1: The value per half a module.
Note 2: The value per module.
Apply 50 μm of 3 W/m · K grease between the case and fin while taking care not to create a void, and tighten to the recommended torque before use.

©2026
Toshiba Electronic Devices & Storage Corporation

7. Electrical Characteristics (T_c = 25 °C, unless otherwise specified)

Characteristics	Symbol	Note	Test Condition	Min	Typ.	Max	Unit	Fig. No
Gate-source leakage current	I_{GSS}		V_{GS} = + 25 V / - 10 V, V_{DS} = 0 V	—	—	±100	nA	—
Drain-source cut-off current	I_{DSS}		V_{DS} = 2300V, V_{GS} = 0 V	—	—	1000	μA	—
Gate threshold voltage	V_{th}	(Note 1)	I_D = 1.5 A, V_{DS} = 10 V	3.5	4.5	5.5	V	—
Drain-source on-voltage (sense)	$V_{DS(on)}$ sense		I_D = 1500 A, V_{GS} = + 20 V, T_{ch} = 25 °C	—	1.4	—	V	—
			I_D = 1500 A, V_{GS} = + 20 V, T_{ch} = 175 °C	—	3.0	4.6	V	—
Drain-source on-voltage (terminal)	$V_{DS(on)}$ terminal		I_D = 1500 A, V_{GS} = + 20 V, T_{ch} = 25 °C	—	1.7	—	V	—
Drain-source on-resistance (sence)	$R_{DS(on)}$ sense		I_D = 1500 A, V_{GS} = + 20 V, T_{ch} = 25 °C	—	0.9	—	mΩ	—
			I_D = 1500 A, V_{GS} = + 20 V, T_{ch} = 175 °C	—	2.0	—	mΩ	—
Input capacitance	C_{iss}		V_{DS} = 1500 V, V_{GS} = 0 V, f = 100 kHz	—	152	—	nF	—
Internal gate resistance	r_{ig}		f = 1 MHz	—	3.0	—	Ω	—
Switching time (turn-on delay time)	$t_{d(on)}$	(Note 2)	Inductive load, V_{DD} = 1500 V, I_D = 1500 A, V_{GS} = + 20 V / - 6 V, C_{gs} = 100 nF, $R_{G(on)}$ = 1.0 Ω, $R_{G(off)}$ = 2.2 Ω, T_{ch} = 175 °C, L_S ≈ 70 nH	—	0.53	—	μs	7.1 7.2 7.3
Switching time (rise time)	t_r			—	0.17	—	μs	
Switching time (turn-on time)	t_{on}			—	0.70	—	μs	
Switching time (turn-off delay time)	$t_{d(off)}$			—	1.60	—	μs	
Switching time (fall time)	t_f			—	0.17	—	μs	
Switching time (turn-off time)	t_{off}			—	1.77	—	μs	
Turn-on switching loss	E_{on}			—	240	300	mJ	
Turn-off switching loss	E_{off}			—	480	600	mJ	
Source-drain on-voltage (sense)	$V_{SD(on)}$ sense		I_S = 1500 A, V_{GS} = + 20 V, T_{ch} = 25 °C	—	1.3	—	V	—
			I_S = 1500 A, V_{GS} = + 20 V, T_{ch} = 175 °C	—	2.9	4.4	V	—
Source-drain on-voltage (terminal)	$V_{SD(on)}$ terminal		I_S = 1500 A, V_{GS} = + 20 V, T_{ch} = 25 °C	—	1.6	—	V	—
Source-drain off-voltage (sense)	$V_{SD(off)}$ sense		I_S = 1500 A, V_{GS} = - 6 V, T_{ch} = 25 °C	—	2.1	—	V	—
			I_S = 1500 A, V_{GS} = - 6 V, T_{ch} = 175 °C	—	3.8	5.7	V	—
Source-drain off-voltage (terminal)	$V_{SD(off)}$ terminal		I_S = 1500 A, V_{GS} = - 6 V, T_{ch} = 25 °C	—	2.4	—	V	—
Reverse recovery time	t_{rr}	(Note 2)	Inductive load, I_S = 1500 A, V_{DD} = 1500 V, V_{GS} = - 6 V, C_{gs} = 100 nF, Drive side $R_{G(on)}$ = 1.0 Ω, T_{ch} = 175 °C, L_S ≈ 70 nH	—	0.07	—	μs	7.4 7.5 7.6
Reverse recovery loss	E_{rr}			—	23	34.5	mJ	
Stray inductance	L_{sPN}		P terminal-N terminal	—	12	—	nH	—
Current sensing inductance	L_{sCS}		1 terminal-8 terminal	—	2.7	—	nH	—
Rated NTC resistance	R		T_c = 25 °C	3.5	5.0	6.5	kΩ	—
			T_c = 150 °C	125	165	205	Ω	—
NTC B value	B		T_{NTC} = 25 to 150 °C	—	3375	—	K	—

Note 1: Gate—source voltage (-10V) is applied 5ms before measurement.

Note 2: L_s is the sum of the stray inductance between the P and N terminals (L_{sPN}) and the stray inductance of external circuitry (L_{ext}) .

©2026
Toshiba Electronic Devices & Storage Corporation

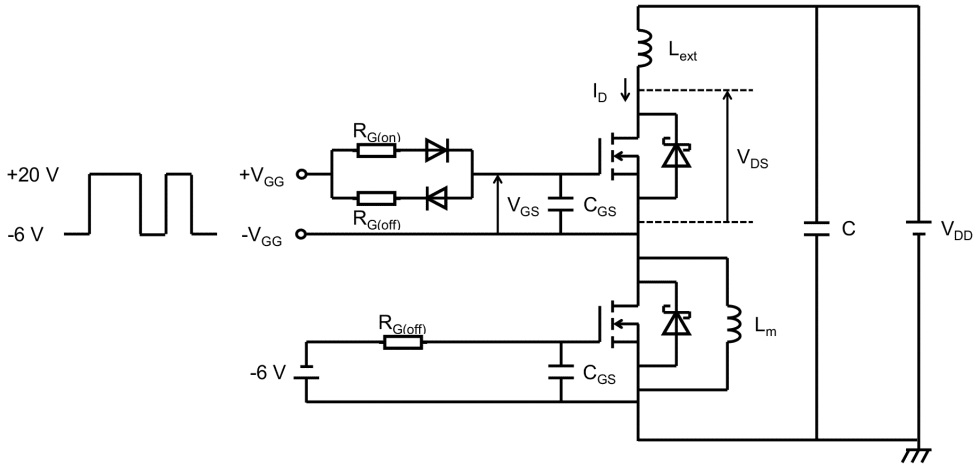

Fig. 7.1 Inductive Load Switching Test Circuit (High side Switching)

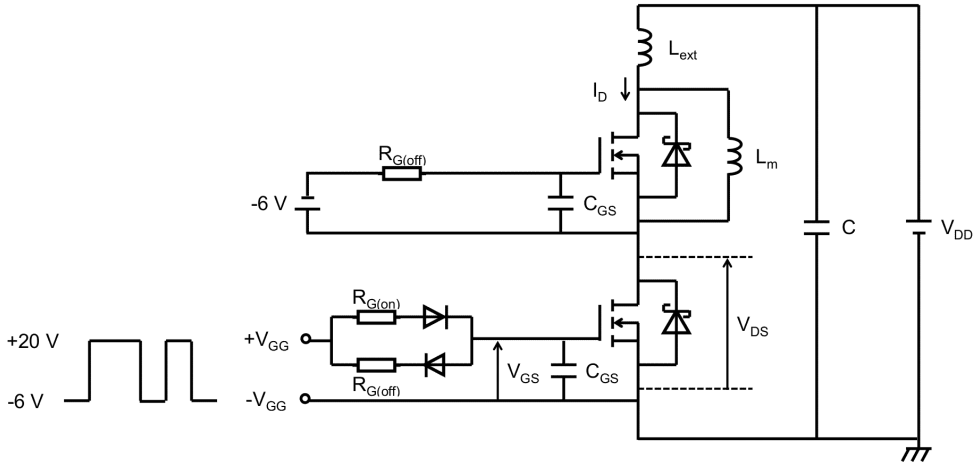

Fig. 7.2 Inductive Load Switching Test Circuit (Low side Switching)

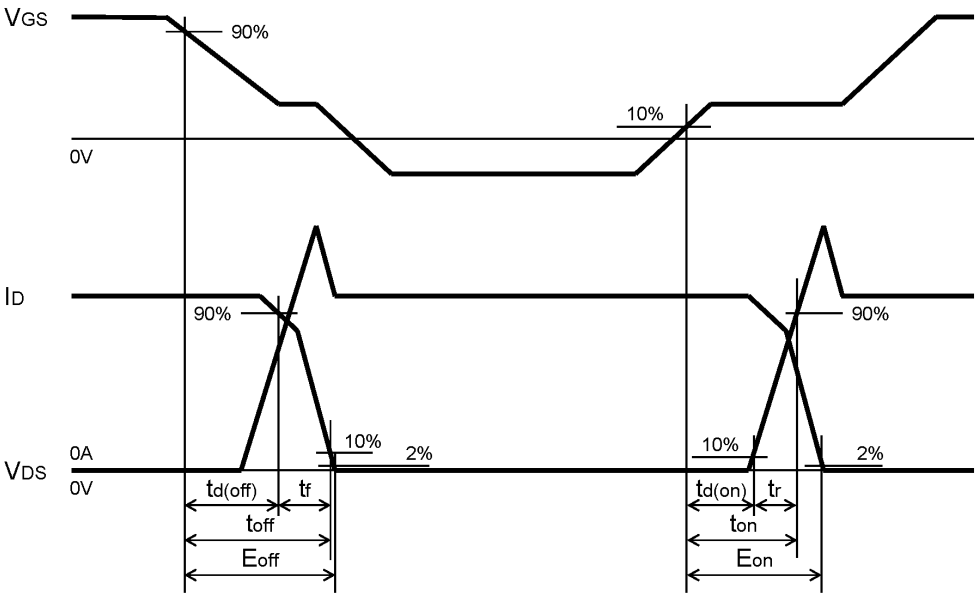

Fig. 7.3 Timing Chart (MOSFET part)

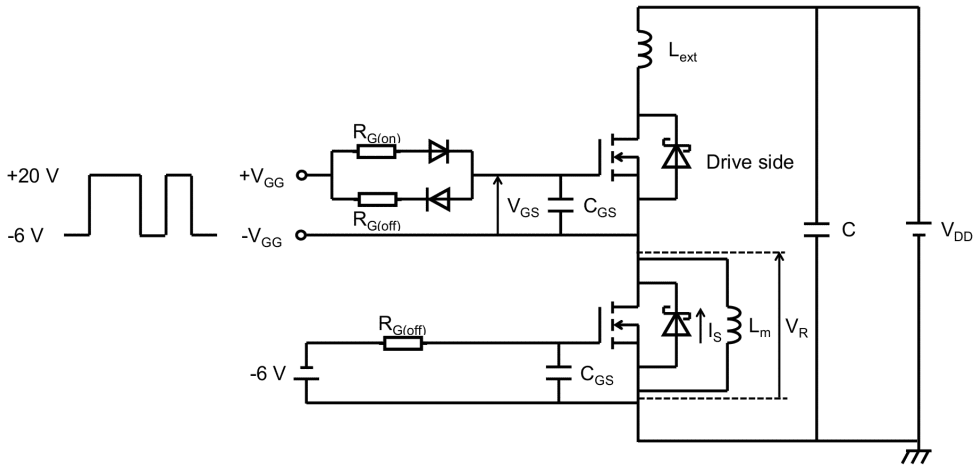

Fig. 7.4 Reverse Inductive Load Switching Test Circuit (High side Switching)

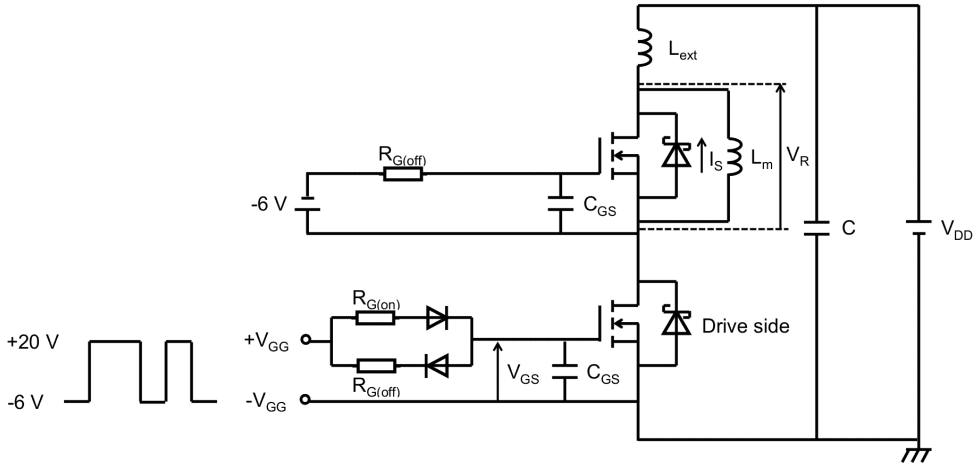

Fig. 7.5 Reverse Inductive Load Switching Test Circuit (Low side Switching)

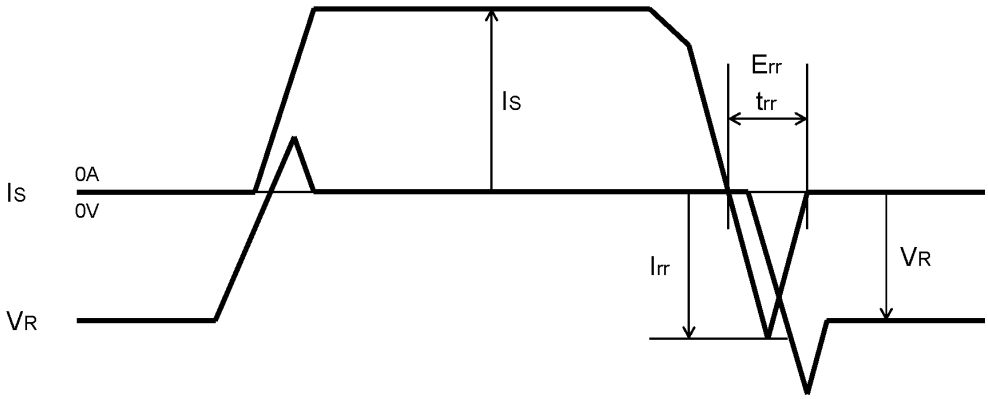

Fig. 7.6 Timing Chart (Diode part)

8. Characteristics Curves (Note)

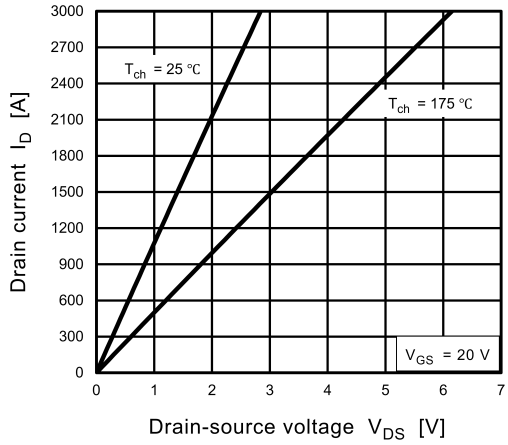

Fig. 8.1 I_D - V_{DS} (Note 1)

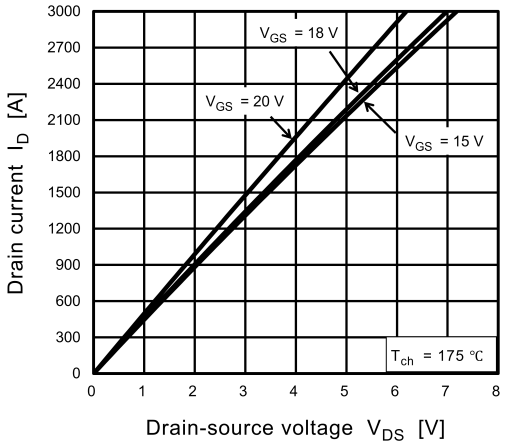

Fig. 8.2 I_D - V_{DS} (Note 1)

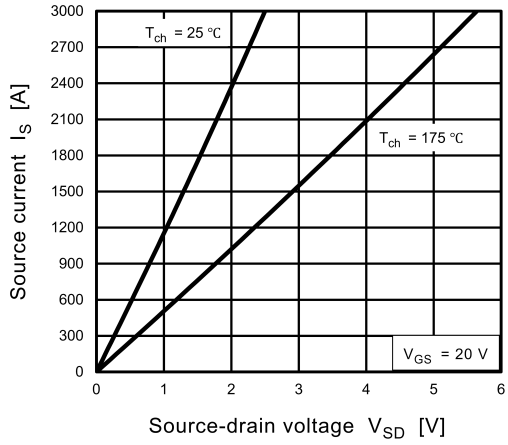

Fig. 8.3 I_S - V_{SD} (Note 1)

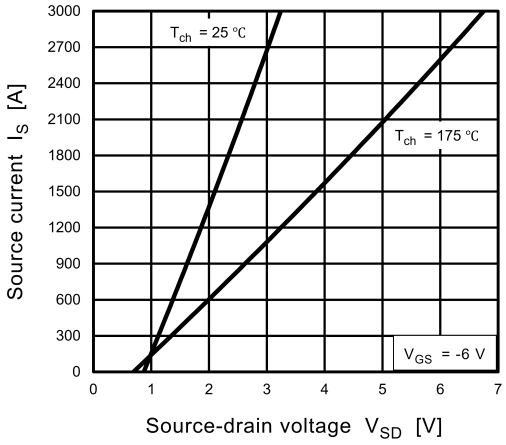

Fig. 8.4 I_S - V_{SD} (Note 1)

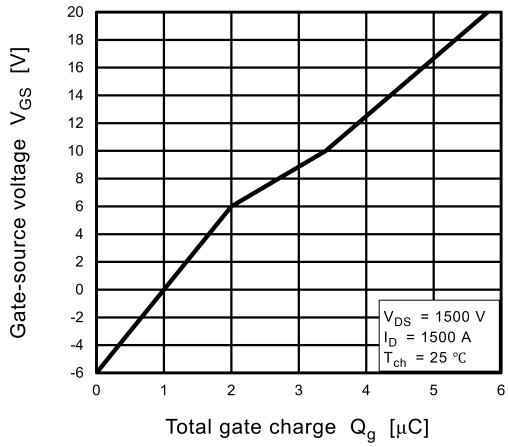

Fig. 8.5 V_{GS} -Q_g

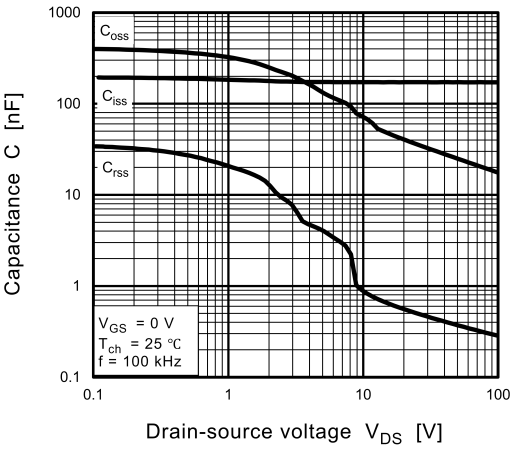

Fig. 8.6 C_{iss}, C_{oss}, C_{rss} - V_{DS}

©2026
Toshiba Electronic Devices & Storage Corporation

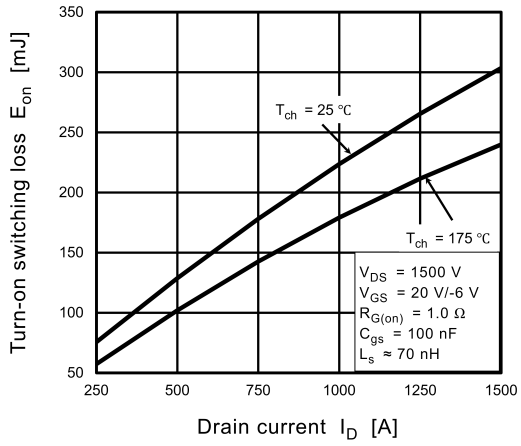

Fig. 8.7 E_{on} - I_D

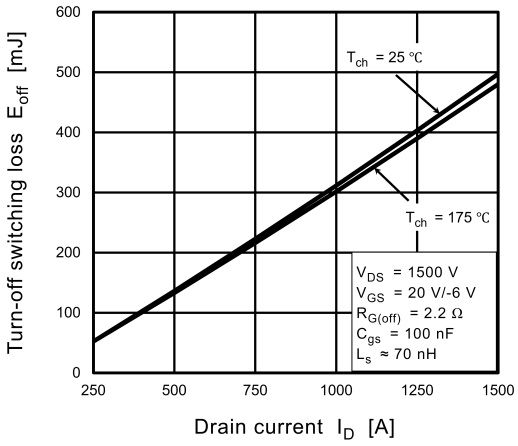

Fig. 8.8 E_{off} - I_D

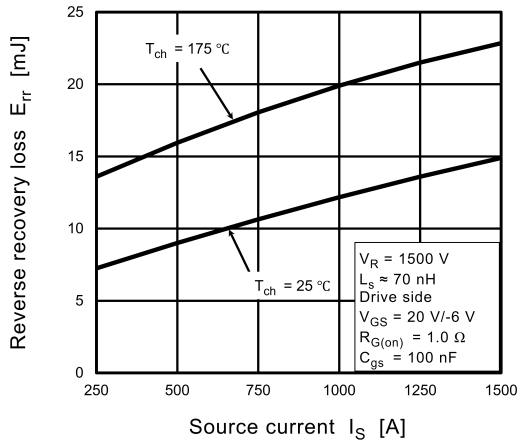

Fig. 8.9 E_{rr} - I_S

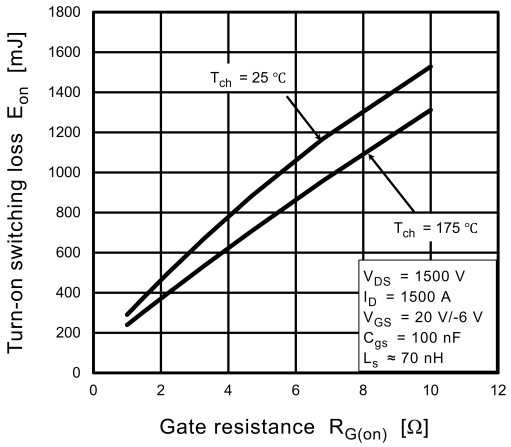

Fig. 8.10 E_{on} - $R_{G(on)}$

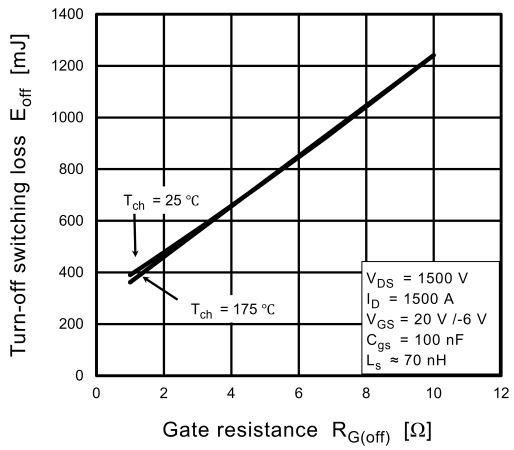

Fig. 8.11 E_{off} - $R_{G(off)}$

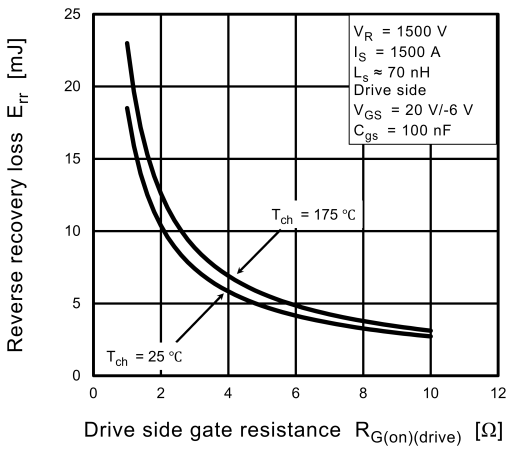

Fig. 8.12 E_{rr} - $R_{G(on)}$

©2026
Toshiba Electronic Devices & Storage Corporation

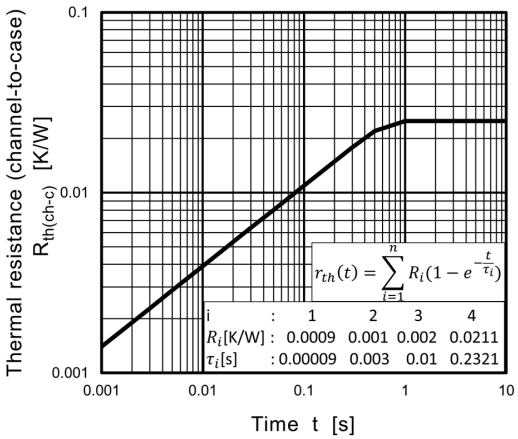

Fig. 8.13 $R_{th(ch-c)}$ - t (Guaranteed Maximum)

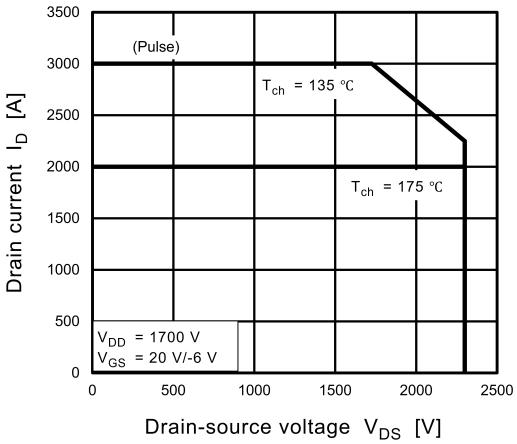

Fig. 8.14 Reverse bias safe operating area (RBSOA)(Guaranteed Maximum)

Note: The above characteristics curves are presented for reference only and not guaranteed by production test, unless otherwise noted.

Note 1: Source - drain voltage and Drain - source voltage are measured at sense terminals.

©2026
Toshiba Electronic Devices & Storage Corporation

Package Dimensions

Unit: mm

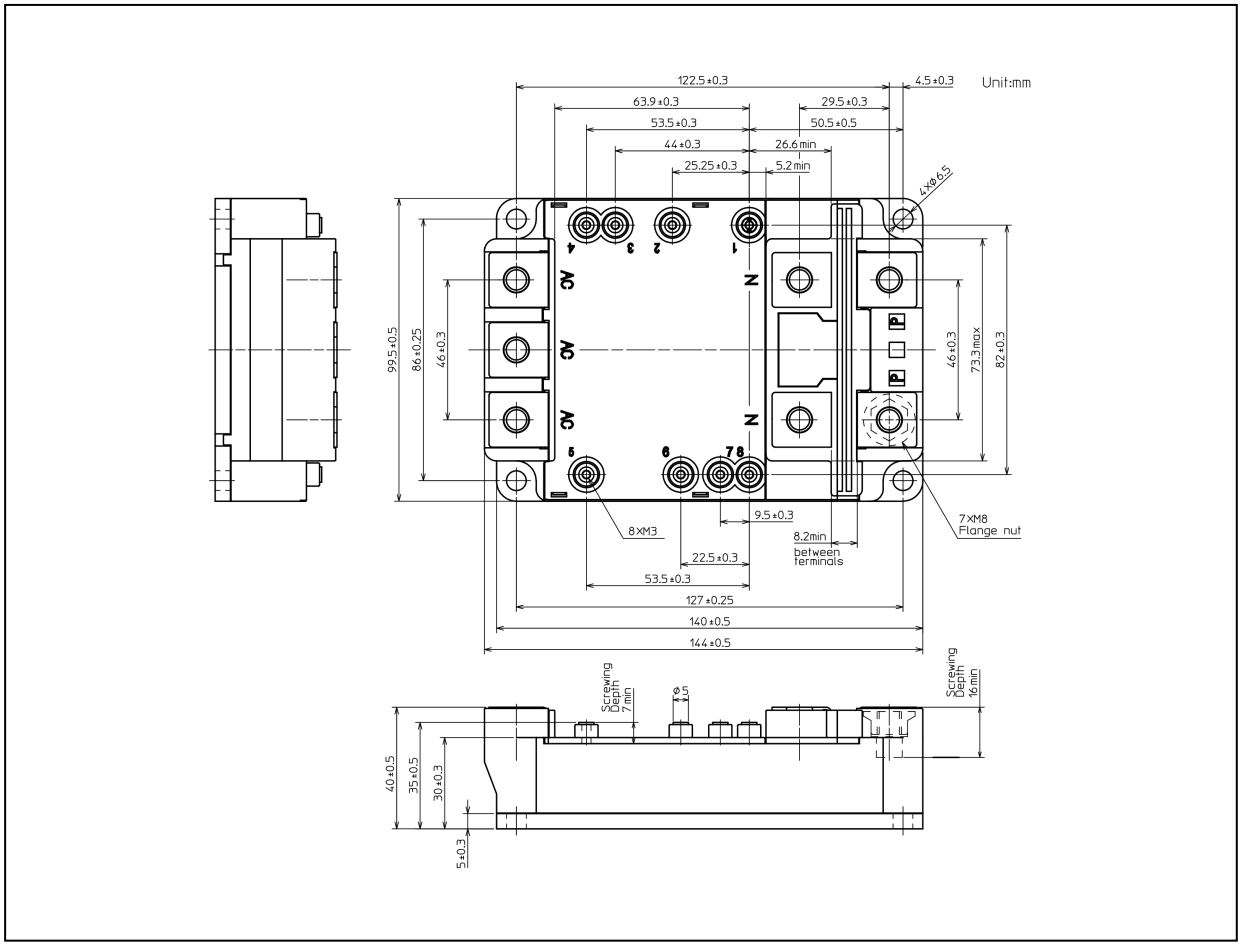

Weight: 840 g (typ.)

Package Name(s)
TOSHIBA: 2-144A2A
Nickname: iXPLV

RESTRICTIONS ON PRODUCT USE

Toshiba Corporation and its subsidiaries and affiliates are collectively referred to as "TOSHIBA".
Hardware, software and systems described in this document are collectively referred to as "Product".

- TOSHIBA reserves the right to make changes to the information in this document and related Product without notice.
- This document and any information herein may not be reproduced without prior written permission from TOSHIBA. Even with TOSHIBA's written permission, reproduction is permissible only if reproduction is without alteration/omission.
- Though TOSHIBA works continually to improve Product's quality and reliability, Product can malfunction or fail. Customers are responsible for complying with safety standards and for providing adequate designs and safeguards for their hardware, software and systems which minimize risk and avoid situations in which a malfunction or failure of Product could cause loss of human life, bodily injury or damage to property, including data loss or corruption. Before customers use the Product, create designs including the Product, or incorporate the Product into their own applications, customers must also refer to and comply with (a) the latest versions of all relevant TOSHIBA information, including without limitation, this document, the specifications, the data sheets and application notes for Product and the precautions and conditions set forth in the "TOSHIBA Semiconductor Reliability Handbook" and (b) the instructions for the application with which the Product will be used with or for. Customers are solely responsible for all aspects of their own product design or applications, including but not limited to (a) determining the appropriateness of the use of this Product in such design or applications; (b) evaluating and determining the applicability of any information contained in this document, or in charts, diagrams, programs, algorithms, sample application circuits, or any other referenced documents; and (c) validating all operating parameters for such designs and applications. **TOSHIBA ASSUMES NO LIABILITY FOR CUSTOMERS' PRODUCT DESIGN OR APPLICATIONS.**
- **PRODUCT IS NEITHER INTENDED NOR WARRANTED FOR USE IN EQUIPMENTS OR SYSTEMS THAT REQUIRE EXTRAORDINARILY HIGH LEVELS OF QUALITY AND/OR RELIABILITY, AND/OR A MALFUNCTION OR FAILURE OF WHICH MAY CAUSE LOSS OF HUMAN LIFE, BODILY INJURY, SERIOUS PROPERTY DAMAGE AND/OR SERIOUS PUBLIC IMPACT ("UNINTENDED USE").** Except for specific applications as expressly stated in this document, Unintended Use includes, without limitation, equipment used in nuclear facilities, equipment used in the aerospace industry, Class 3 medical devices, equipment used for automobiles, and military vehicles and munitions. **IF YOU USE PRODUCT FOR UNINTENDED USE, TOSHIBA ASSUMES NO LIABILITY FOR PRODUCT.** For details, please contact your TOSHIBA sales representative or contact us via our website.
- Do not disassemble, analyze, reverse-engineer, alter, modify, translate or copy Product, whether in whole or in part.
- Product shall not be used for or incorporated into any products or systems whose manufacture, use, or sale is prohibited under any applicable laws or regulations.
- The information contained herein is presented only as guidance for Product use. No responsibility is assumed by TOSHIBA for any infringement of patents or any other intellectual property rights of third parties that may result from the use of Product. No license to any intellectual property right is granted by this document, whether express or implied, by estoppel or otherwise.
- **ABSENT A WRITTEN SIGNED AGREEMENT, EXCEPT AS PROVIDED IN THE RELEVANT TERMS AND CONDITIONS OF SALE FOR PRODUCT, AND TO THE MAXIMUM EXTENT ALLOWABLE BY LAW, TOSHIBA (1) ASSUMES NO LIABILITY WHATSOEVER, INCLUDING WITHOUT LIMITATION, INDIRECT, CONSEQUENTIAL, SPECIAL, OR INCIDENTAL DAMAGES OR LOSS, INCLUDING WITHOUT LIMITATION, LOSS OF PROFITS, LOSS OF OPPORTUNITIES, BUSINESS INTERRUPTION AND LOSS OF DATA, AND (2) DISCLAIMS ANY AND ALL EXPRESS OR IMPLIED WARRANTIES AND CONDITIONS RELATED TO SALE, USE OF PRODUCT, OR INFORMATION, INCLUDING WARRANTIES OR CONDITIONS OF MERCHANTABILITY, FITNESS FOR A PARTICULAR PURPOSE, ACCURACY OF INFORMATION, OR NONINFRINGEMENT.**
- Do not use or otherwise make available Product or related software or technology for any military purposes, including without limitation, for the design, development, use, stockpiling or manufacturing of nuclear, chemical, or biological weapons or missile technology products (mass destruction weapons). Product and related software and technology may be controlled under the applicable export laws and regulations including, without limitation, the Japanese Foreign Exchange and Foreign Trade Law and the U.S. Export Administration Regulations. Export and re-export of Product or related software or technology are strictly prohibited except in compliance with all applicable export laws and regulations.
- Please contact your TOSHIBA sales representative for details as to environmental matters such as the RoHS compatibility of Product. Please use Product in compliance with all applicable laws and regulations that regulate the inclusion or use of controlled substances, including without limitation, the EU RoHS Directive. **TOSHIBA ASSUMES NO LIABILITY FOR DAMAGES OR LOSSES OCCURRING AS A RESULT OF NONCOMPLIANCE WITH APPLICABLE LAWS AND REGULATIONS.**

©2026
Toshiba Electronic Devices & Storage Corporation