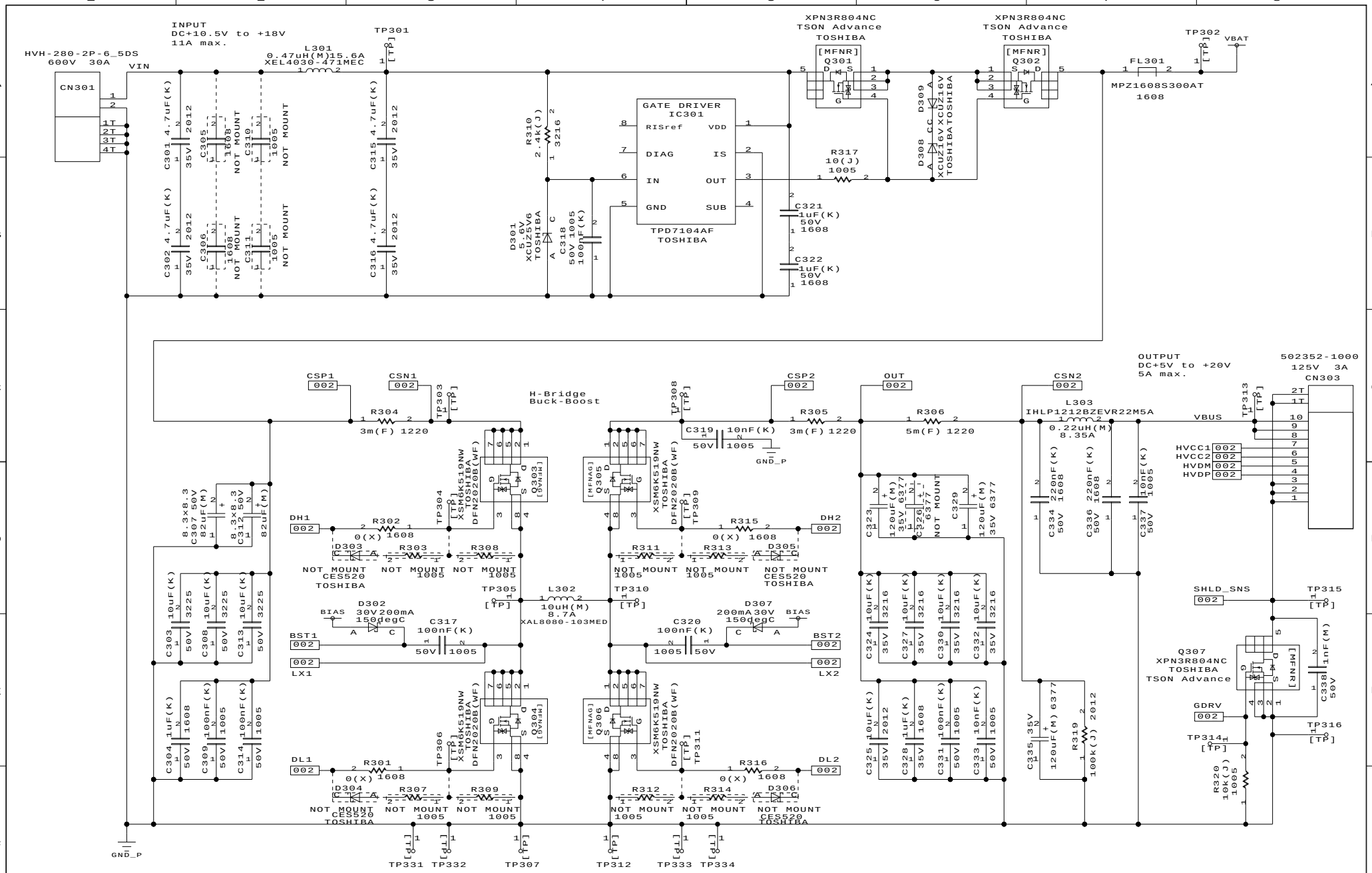

CONTROL NUM.	TITLE	FUNCTION	Sheet Num.	Rev.	Date
RD227-SCHEMATIC2-02	Automotive Buck-Boost DC-DC Converter for USB PD	Power Stage	1/2	02	2026/06/26

(C)Copyright 2026 Toshiba Electronic Devices & Storage Corporation

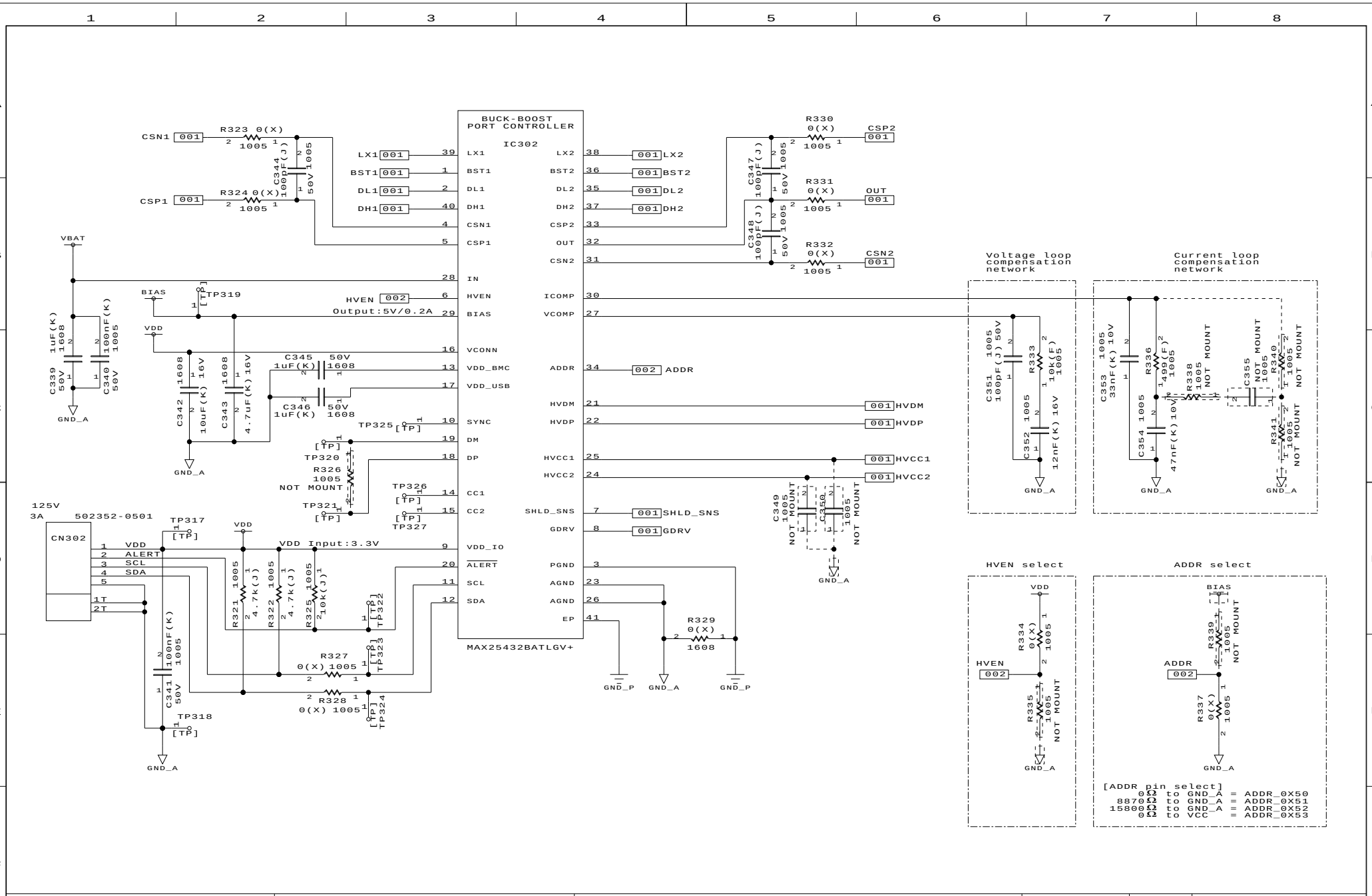

CONTROL NUM.	TITLE	FUNCTION	Sheet Num.	Rev.	Date
RD227-SCHEMATIC2-02	Automotive Buck-Boost DC-DC Converter for USB PD	Control Stage	2/2	02	2026/06/26

(C)Copyright 2026 Toshiba Electronic Devices & Storage Corporation