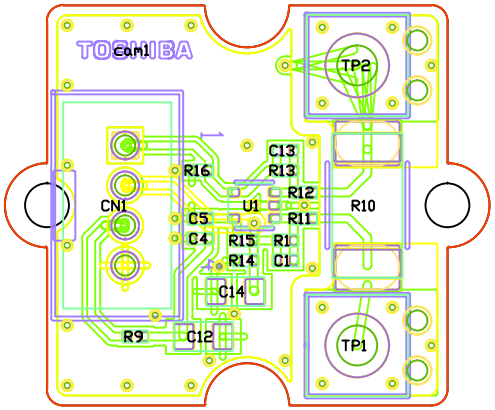

Control Num.	TITLE	Function	Sheet Num.	Rev.	Date
RD161-LAYER1-01	Application Circuit of Low Noise Op-Amp TC75S67TU for Current Sensor		1/1	01	2019-08-26

(C) Copyright 2019 Toshiba Electronic Devices & Storage Corporation