TOSHIBA

8 Bit Microcontroller

TLCS-870/C Series

TMP86PM46NG

Not Recommended for New Design

TOSHIBA CORPORATION

The information contained herein is subject to change without notice. 021023 _ D

TOSHIBA is continually working to improve the quality and reliability of its products. Nevertheless, semiconductor devices in general can malfunction or fail due to their inherent electrical sensitivity and vulnerability to physical stress.
It is the responsibility of the buyer, when utilizing TOSHIBA products, to comply with the standards of safety in making a safe design for the entire system, and to avoid situations in which a malfunction or failure of such TOSHIBA products could cause loss of human life, bodily injury or damage to property.
In developing your designs, please ensure that TOSHIBA products are used within specified operating ranges as set forth in the most recent TOSHIBA products specifications.
Also, please keep in mind the precautions and conditions set forth in the "Handling Guide for Semiconductor Devices," or "TOSHIBA Semiconductor Reliability Handbook" etc. 021023_A

The Toshiba products listed in this document are intended for usage in general electronics applications (computer, personal equipment, office equipment, measuring equipment, industrial robotics, domestic appliances, etc.).
These Toshiba products are neither intended nor warranted for usage in equipment that requires extraordinarily high quality and/or reliability or a malfunction or failure of which may cause loss of human life or bodily injury ("Unintended Usage"). Unintended Usage include atomic energy control instruments, airplane or spaceship instruments, transportation instruments, traffic signal instruments, combustion control instruments, medical instruments, all types of safety devices, etc. Unintended Usage of Toshiba products listed in this document shall be made at the customer's own risk. 021023_B

The products described in this document shall not be used or embedded to any downstream products of which manufacture, use and/or sale are prohibited under any applicable laws and regulations. 060106_Q

The information contained herein is presented only as a guide for the applications of our products. No responsibility is assumed by TOSHIBA for any infringements of patents or other rights of the third parties which may result from its use. No license is granted by implication or otherwise under any patent or patent rights of TOSHIBA or others. 021023_C

The products described in this document may include products subject to the foreign exchange and foreign trade laws. 021023_F

For a discussion of how the reliability of microcontrollers can be predicted, please refer to Section 1.3 of the chapter entitled Quality and Reliability Assurance/Handling Precautions. 030619_S

© 2007 TOSHIBA CORPORATION
All Rights Reserved

Not Recommended for New Design

Revision History

Date	Revision	
2007/3/7	1	First Release
2008/8/29	2	Contents Revised

Not Recommended for New Design

Caution in Setting the UART Noise Rejection Time

When UART is used, settings of RXDNC are limited depending on the transfer clock specified by BRG. The combination "O" is available but please do not select the combination "–".

The transfer clock generated by timer/counter interrupt is calculated by the following equation :

Transfer clock [Hz] = Timer/counter source clock [Hz] ÷ TTREG set value

BRG setting	Transfer clock [Hz]	RXDNC setting			
		00 (No noise rejection)	01 (Reject pulses shorter than 31/fc[s] as noise)	10 (Reject pulses shorter than 63/fc[s] as noise)	11 (Reject pulses shorter than 127/fc[s] as noise)
000	fc/13	O	O	O	–
110 (When the transfer clock generated by timer/counter interrupt is the same as the right side column)	fc/8	O	–	–	–
	fc/16	O	O	–	–
	fc/32	O	O	O	–
The setting except the above		O	O	O	O

Not Recommended for New Design

Not Recommended
for New Design

Table of Contents

TMP86PM46NG

1.1 Features 1
1.2 Pin Assignment 3
1.3 Block Diagram 4
1.4 Pin Names and Functions 5

2. Operational Description

2.1 CPU Core Functions 7
2.1.1 Memory Address Map 7
2.1.2 Program Memory (OTP) 7
2.1.3 Data Memory (RAM) 7
2.2 System Clock Controller 8
2.2.1 Clock Generator 8
2.2.2 Timing Generator 10
2.2.2.1 Configuration of timing generator
2.2.2.2 Machine cycle
2.2.3 Operation Mode Control Circuit 11
2.2.3.1 Single-clock mode
2.2.3.2 Dual-clock mode
2.2.3.3 STOP mode
2.2.4 Operating Mode Control 16
2.2.4.1 STOP mode
2.2.4.2 IDLE1/2 mode and SLEEP1/2 mode
2.2.4.3 IDLE0 and SLEEP0 modes (IDLE0, SLEEP0)
2.2.4.4 SLOW mode
2.3 Reset Circuit 29
2.3.1 External Reset Input 29
2.3.2 Address trap reset 30
2.3.3 Watchdog timer reset 30
2.3.4 System clock reset 30

3. Interrupt Control Circuit

3.1 Interrupt latches (IL15 to IL2) 33
3.2 Interrupt enable register (EIR) 34
3.2.1 Interrupt master enable flag (IMF) 34
3.2.2 Individual interrupt enable flags (EF15 to EF4) 34
3.3 Interrupt Source Selector (INTSEL) 37
3.4 Interrupt Sequence 37
3.4.1 Interrupt acceptance processing is packaged as follows. 37
3.4.2 Saving/restoring general-purpose registers 38
3.4.2.1 Using PUSH and POP instructions
3.4.2.2 Using data transfer instructions
3.4.3 Interrupt return 40
3.5 Software Interrupt (INTSW) 41
3.5.1 Address error detection 41
3.5.2 Debugging 41

Not Recommended for New Design

3.6 Undefined Instruction Interrupt (INTUNDEF) 41
3.7 Address Trap Interrupt (INTATRAP) 41
3.8 External Interrupts 41

4. Special Function Register (SFR)

4.1 SFR 45

5. I/O Ports

5.1 Port P0 (P07 to P00) 48
5.2 Port P1 (P15 to P10) 49
5.3 Port P2 (P22 to P20) 50
5.4 Port P3 (P37 to P30) 51
5.5 Port P4 (P47 to P40) 52

6. Time Base Timer (TBT)

6.1 Time Base Timer 53
6.1.1 Configuration 53
6.1.2 Control 53
6.1.3 Function 54
6.2 Divider Output (DVO) 55
6.2.1 Configuration 55
6.2.2 Control 55

7. Watchdog Timer (WDT)

7.1 Watchdog Timer Configuration 57
7.2 Watchdog Timer Control 58
7.2.1 Malfunction Detection Methods Using the Watchdog Timer 58
7.2.2 Watchdog Timer Enable 59
7.2.3 Watchdog Timer Disable 60
7.2.4 Watchdog Timer Interrupt (INTWDT) 60
7.2.5 Watchdog Timer Reset 61
7.3 Address Trap 62
7.3.1 Selection of Address Trap in Internal RAM (ATAS) 62
7.3.2 Selection of Operation at Address Trap (ATOUT) 62
7.3.3 Address Trap Interrupt (INTATRAP) 62
7.3.4 Address Trap Reset 63

8. 16-Bit TimerCounter 1 (TC1)

8.1 Configuration 65
8.2 TimerCounter Control 66
8.3 Function 68
8.3.1 Timer mode 68
8.3.2 External Trigger Timer Mode 70
8.3.3 Event Counter Mode 72
8.3.4 Window Mode 73

Not Recommended for New Design

8.3.5 Pulse Width Measurement Mode 74
8.3.6 Programmable Pulse Generate (PPG) Output Mode 77

9. 8-Bit TimerCounter (TC3, TC4)

9.1 Configuration 81
9.2 TimerCounter Control 82
9.3 Function 87
9.3.1 8-Bit Timer Mode (TC3 and 4) 87
9.3.2 8-Bit Event Counter Mode (TC3, 4) 88
9.3.3 8-Bit Programmable Divider Output (PDO) Mode (TC3, 4) 88
9.3.4 8-Bit Pulse Width Modulation (PWM) Output Mode (TC3, 4) 91
9.3.5 16-Bit Timer Mode (TC3 and 4) 93
9.3.6 16-Bit Event Counter Mode (TC3 and 4) 94
9.3.7 16-Bit Pulse Width Modulation (PWM) Output Mode (TC3 and 4) 94
9.3.8 16-Bit Programmable Pulse Generate (PPG) Output Mode (TC3 and 4) 97
9.3.9 Warm-Up Counter Mode 99
9.3.9.1 Low-Frequency Warm-up Counter Mode (NORMAL1 → NORMAL2 → SLOW2 → SLOW1)
9.3.9.2 High-Frequency Warm-Up Counter Mode (SLOW1 → SLOW2 → NORMAL2 → NORMAL1)

10. Synchronous Serial Interface (SIO)

10.1 Configuration 101
10.2 Control 102
10.3 Function 104
10.3.1 Serial clock 104
10.3.1.1 Clock source
10.3.1.2 Shift edge
10.3.2 Transfer bit direction 106
10.3.2.1 Transmit mode
10.3.2.2 Receive mode
10.3.2.3 Transmit/receive mode
10.3.3 Transfer modes 107
10.3.3.1 Transmit mode
10.3.3.2 Receive mode
10.3.3.3 Transmit/receive mode

11. Asynchronous Serial interface (UART)

11.1 Configuration 119
11.2 Control 120
11.3 Transfer Data Format 122
11.4 Transfer Rate 123
11.5 Data Sampling Method 123
11.6 STOP Bit Length 124
11.7 Parity 124
11.8 Transmit/Receive Operation 124
11.8.1 Data Transmit Operation 124
11.8.2 Data Receive Operation 124
11.9 Status Flag 125
11.9.1 Parity Error 125
11.9.2 Framing Error 125
11.9.3 Overrun Error 125
11.9.4 Receive Data Buffer Full 126
11.9.5 Transmit Data Buffer Empty 126

Not Recommended for New Design

11.9.6 Transmit End Flag 127

12. 10-bit AD Converter (ADC)

12.1 Configuration 129
12.2 Register configuration 130
12.3 Function 133
12.3.1 Software Start Mode 133
12.3.2 Repeat Mode 133
12.3.3 Register Setting 134
12.4 STOP/SLOW Modes during AD Conversion 135
12.5 Analog Input Voltage and AD Conversion Result 136
12.6 Precautions about AD Converter 137
12.6.1 Analog input pin voltage range 137
12.6.2 Analog input shared pins 137
12.6.3 Noise Countermeasure 137

13. Key-on Wakeup (KWU)

13.1 Configuration 139
13.2 Control 139
13.3 Function 139

14. OTP operation

14.1 Operating mode 141
14.1.1 MCU mode 141
14.1.1.1 Program Memory
14.1.1.2 Data Memory
14.1.1.3 Input/Output Circuiry
14.1.2 PROM mode 143
14.1.2.1 Programming Flowchart (High-speed program writing)
14.1.2.2 Program Writing using a General-purpose PROM Programmer

15. Input/Output Circuitry

15.1 Control Pins 147
15.2 Input/Output Ports 148

16. Electrical Characteristics

16.1 Absolute Maximum Ratings 149
16.2 Recommended Operating Condition 150
16.3 DC Characteristics 151
16.4 AD Conversion Characteristics 152
16.5 AC Characteristics 153
16.6 DC Characteristics, AC Characteristics (PROM mode) 154
16.6.1 Read operation in PROM mode 154
16.6.2 Program operation (High-speed) 155
16.7 Recommended Oscillating Conditions 156

Not Recommended for New Design

16.8 Handling Precaution 156

17. Package Dimensions

This is a technical document that describes the operating functions and electrical specifications of the 8-bit microcontroller series TLCS-870/C (LSI).

Not Recommended for New Design

Not Recommended
for New Design

CMOS 8-Bit Microcontroller

TMP86PM46NG

The TMP86PM46NG is a single-chip 8-bit high-speed and high-functionality microcomputer incorporating 32768 bytes of One-Time PROM. It is pin-compatible with the TMP86CM46ANG (Mask ROM version). The TMP86PM46NG can realize operations equivalent to those of the TMP86CM46ANG by programming the on-chip PROM.

Product No.	ROM (EPROM)	RAM	Package	MaskROM MCU	Emulation Chip
TMP86PM46NG	32768 bytes	1024 bytes	SDIP42-P-600-1.78	TMP86CM46ANG	TMP86C947XB

1.1 Features

1. 8-bit single chip microcomputer TLCS-870/C series
   - Instruction execution time :

     0.25 μs (at 16 MHz)

     122 μs (at 32.768 kHz)
   - 132 types & 731 basic instructions
2. 18interrupt sources (External : 6 Internal : 12)
3. Input / Output ports (33 pins)

   Large current output: 19pins (Typ. 20mA), LED direct drive
4. Prescaler
   - Time base timer
   - Divider output function
5. Watchdog Timer
6. 16-bit timer counter: 1 ch
   - Timer, External trigger, Window, Pulse width measurement,

     Event counter, Programmable pulse generate (PPG) modes
7. 8-bit timer counter : 2 ch
   - Timer, Event counter, Programmable divider output (PDO),

Not Recommended for New Design

060116EBP

- The information contained herein is subject to change without notice. 021023_D
- TOSHIBA is continually working to improve the quality and reliability of its products. Nevertheless, semiconductor devices in general can malfunction or fail due to their inherent electrical sensitivity and vulnerability to physical stress. It is the responsibility of the buyer, when utilizing TOSHIBA products, to comply with the standards of safety in making a safe design for the entire system, and to avoid situations in which a malfunction or failure of such TOSHIBA products could cause loss of human life, bodily injury or damage to property.
  In developing your designs, please ensure that TOSHIBA products are used within specified operating ranges as set forth in the most recent TOSHIBA products specifications. Also, please keep in mind the precautions and conditions set forth in the “Handling Guide for Semiconductor Devices,” or “TOSHIBA Semiconductor Reliability Handbook” etc. 021023_A
- The TOSHIBA products listed in this document are intended for usage in general electronics applications (computer, personal equipment, office equipment, measuring equipment, industrial robotics, domestic appliances, etc.). These TOSHIBA products are neither intended nor warranted for usage in equipment that requires extraordinarily high quality and/or reliability or a malfunctionor failure of which may cause loss of human life or bodily injury (“Unintended Usage”). Unintended Usage include atomic energy control instruments, airplane or spaceship instruments, transportation instruments, traffic signal instruments, combustion control instruments, medical instruments, all types of safety devices, etc. Unintended Usage of TOSHIBA products listed in this document shall be made at the customer's own risk. 021023_B
- The products described in this document shall not be used or embedded to any downstream products of which manufacture, use and/or sale are prohibited under any applicable laws and regulations. 060106_Q
- The information contained herein is presented only as a guide for the applications of our products. No responsibility is assumed by TOSHIBA for any infringements of patents or other rights of the third parties which may result from its use. No license is granted by implication or otherwise under any patent or patent rights of TOSHIBA or others. 021023_C
- The products described in this document are subject to the foreign exchange and foreign trade laws. 021023_E
- For a discussion of how the reliability of microcontrollers can be predicted, please refer to Section 1.3 of the chapter entitled Quality and Reliability Assurance/Handling Precautions. 030619_S

Pulse width modulation (PWM) output,

Programmable pulse generation (PPG) modes

8. High-Speed SIO: 1ch
9. 8-bit UART : 1 ch
10. 10-bit successive approximation type AD converter
    - Analog input: 8 ch
11. Key-on wakeup : 4 ch
12. Clock operation

    Single clock mode

    Dual clock mode
13. Low power consumption operation

    STOP mode: Oscillation stops. (Battery/Capacitor back-up.)

    SLOW1 mode: Low power consumption operation using low-frequency clock.(High-frequency clock stop.)

    SLOW2 mode: Low power consumption operation using low-frequency clock.(High-frequency clock oscillate.)

    IDLE0 mode: CPU stops, and only the Time-Based-Timer(TBT) on peripherals operate using high frequency clock. Release by falling edge of the source clock which is set by TBTCR<TBTCK>.

    IDLE1 mode: CPU stops and peripherals operate using high frequency clock. Release by interruputs(CPU restarts).

    IDLE2 mode: CPU stops and peripherals operate using high and low frequency clock. Release by interruputs. (CPU restarts).

    SLEEP0 mode: CPU stops, and only the Time-Based-Timer(TBT) on peripherals operate using low frequency clock.Release by falling edge of the source clock which is set by TBTCR<TBTCK>.

    SLEEP1 mode: CPU stops, and peripherals operate using low frequency clock. Release by interruput.(CPU restarts).

    SLEEP2 mode: CPU stops and peripherals operate using high and low frequency clock. Release by interruput.
14. Wide operation voltage:

    4.5 V to 5.5 V at 16MHz /32.768 kHz

    2.7 V to 5.5 V at 8 MHz /32.768 kHz

    1.8 V to 5.5 V at 4.2MHz /32.768 kHz

Not Recommended for New Design

1.2 Pin Assignment

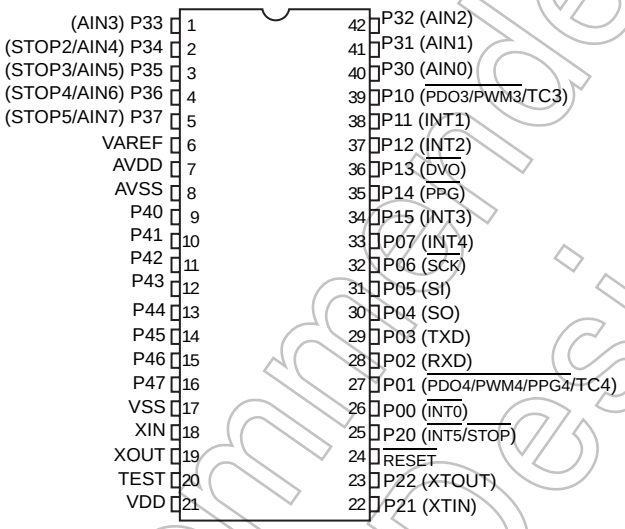

Figure 1-1 Pin Assignment

Not Recommended for New Design

1.3 Block Diagram

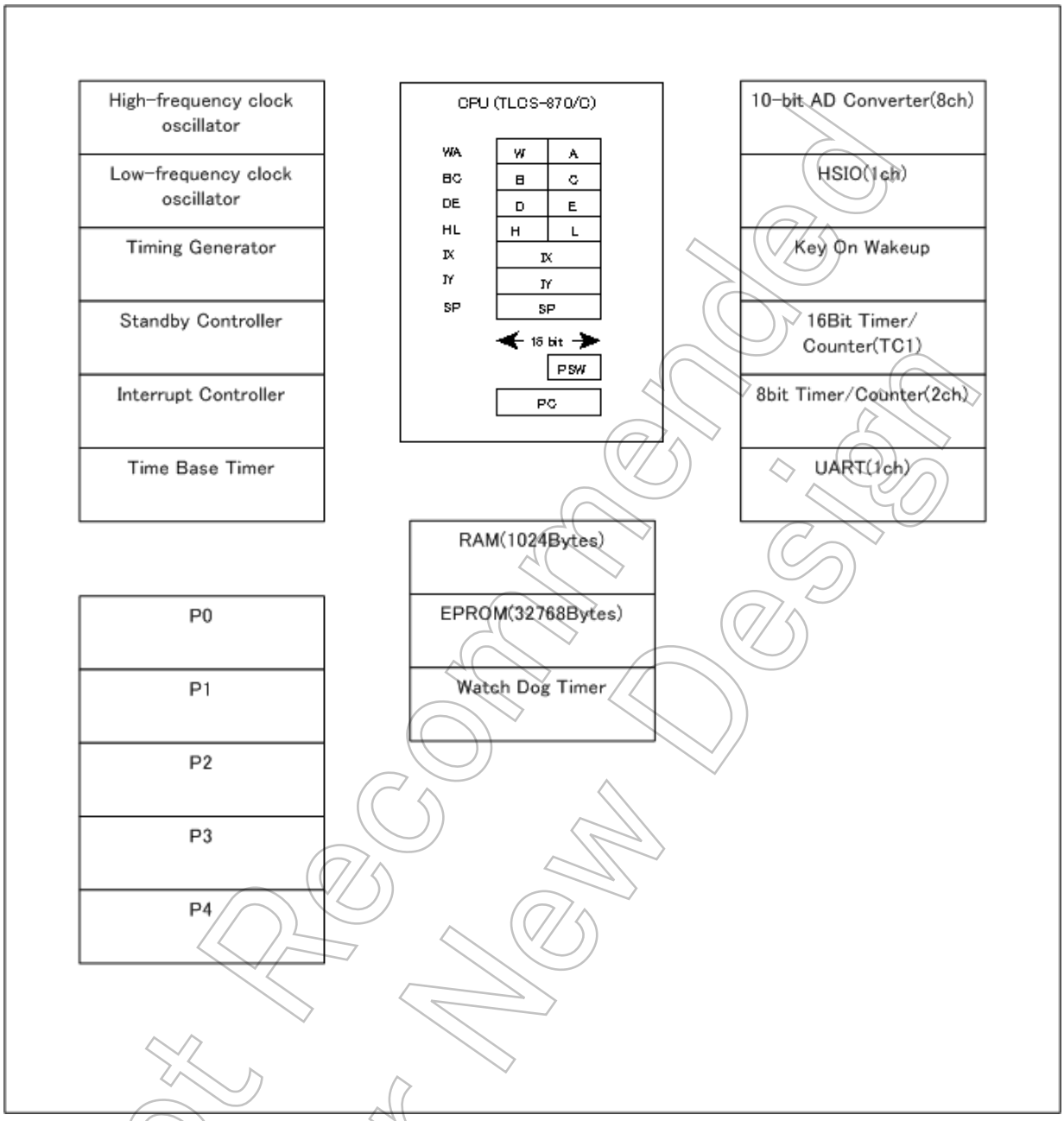

Figure 1-2 Block Diagram

Not Recommended for New Design

1.4 Pin Names and Functions

The TMP86PM46NG has MCU mode and PROM mode. Table 1-1 shows the pin functions in MCU mode. The PROM mode is explained later in a separate chapter.

Table 1-1 Pin Names and Functions(1/2)

Pin Name	Pin Number	Input/Output	Functions
P07 INT4	33	IO I	PORT07 External interrupt 4 input
P06 $\overline{\text{SCK}}$	32	IO IO	PORT06 Serial clock input/output
P05 SI	31	IO I	PORT05 Serial data input
P04 SO	30	IO O	PORT04 Serial data output
P03 TXD	29	IO O	PORT03 UART data output
P02 RXD	28	IO I	PORT02 UART data input
P01 $\overline{\text{PDO4/PWM4/PPG4}}$ TC4	27	IO O I	PORT01 PDO4/PWM4/PPG4 output TC4 input
P00 $\overline{\text{INT0}}$	26	IO I	PORT00 External interrupt 0 input
P15 INT3	34	IO I	PORT15 External interrupt 3 input
P14 $\overline{\text{PPG}}$	35	IO O	PORT14 PPG output
P13 $\overline{\text{DVO}}$	36	IO O	PORT13 Divider Output
P12 INT2	37	IO I	PORT12 External interrupt 2 input
P11 INT1	38	IO I	PORT11 External interrupt 1 input
P10 $\overline{\text{PDO3/PWM3}}$ TC3	39	IO O I	PORT10 PDO3/PWM3 output TC3 input
P22 XTOUT	23	IO O	PORT22 Resonator connecting pins(32.768kHz) for inputting external clock
P21 XTIN	22	IO I	PORT21 Resonator connecting pins(32.768kHz) for inputting external clock
P20 $\overline{\text{INT5}}$ $\overline{\text{STOP}}$	25	IO I I	PORT20 External interrupt 5 input STOP mode release signal input
P37 AIN7 STOP5	5	IO I I	PORT37 Analog Input7 STOP5 input

Not Recommended for New Design

Table 1-1 Pin Names and Functions(2/2)

Pin Name	Pin Number	Input/Output	Functions
P36 AIN6 STOP4	4	IO I I	PORT36 Analog Input6 STOP4 input
P35 AIN5 STOP3	3	IO I I	PORT35 Analog Input5 STOP3 input
P34 AIN4 STOP2	2	IO I I	PORT34 Analog Input4 STOP2 input
P33 AIN3	1	IO I	PORT33 Analog Input3
P32 AIN2	42	IO I	PORT32 Analog Input2
P31 AIN1	41	IO I	PORT31 Analog Input1
P30 AIN0	40	IO I	PORT30 Analog Input0
P47	16	IO	PORT47
P46	15	IO	PORT46
P45	14	IO	PORT45
P44	13	IO	PORT44
P43	12	IO	PORT43
P42	11	IO	PORT42
P41	10	IO	PORT41
P40	9	IO	PORT40
XIN	18	I	Resonator connecting pins for high-frequency clock
XOUT	19	O	Resonator connecting pins for high-frequency clock
$\overline{\text{RESET}}$	24	IO	Reset signal
TEST	20	I	Test pin for out-going test. Normally, be fixed to low.
VAREF	6	I	Analog Base Voltage Input Pin for A/D Conversion
AVDD	7	I	Analog Power Supply
AVSS	8	I	Analog Power Supply
VDD	21	I	+5V
VSS	17	I	0(GND)

Not Recommended for New Design

2. Operational Description

2.1 CPU Core Functions

The CPU core consists of a CPU, a system clock controller, and an interrupt controller.

This section provides a description of the CPU core, the program memory, the data memory, and the reset circuit.

2.1.1 Memory Address Map

The TMP86PM46NG memory is composed OTP, RAM and SFR(Special function register). They are all mapped in 64-Kbyte address space. Figure 2-1 shows the TMP86PM46NG memory address map.

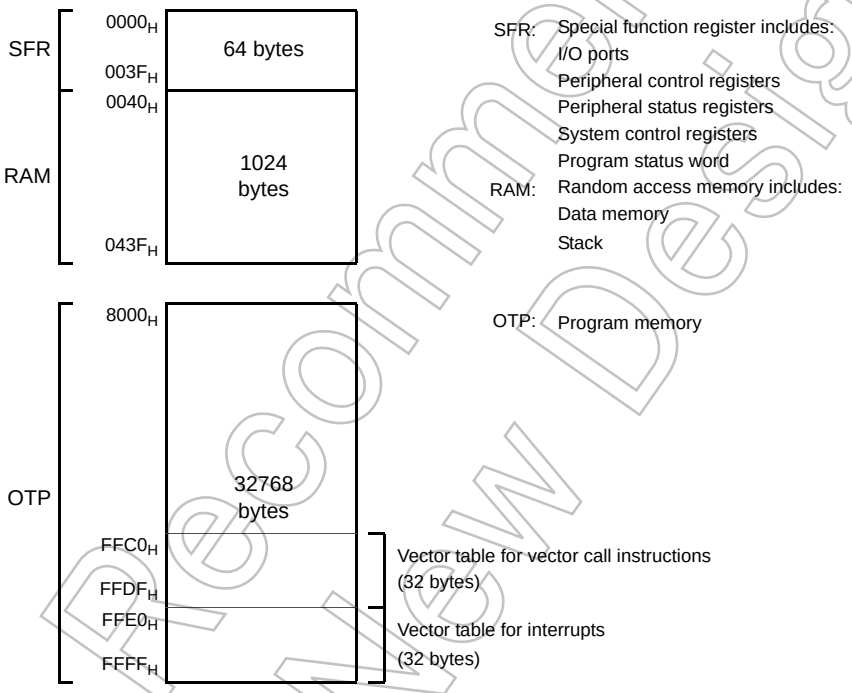

Figure 2-1 Memory Address Map

2.1.2 Program Memory (OTP)

The TMP86PM46NG has a 32768 bytes (Address 8000H to FFFFH) of program memory (OTP).

2.1.3 Data Memory (RAM)

The TMP86PM46NG has 1024bytes (Address 0040H to 043FH) of internal RAM. The first 192 bytes (0040H to 00FFH) of the internal RAM are located in the direct area; instructions with shorten operations are available against such an area.

The data memory contents become unstable when the power supply is turned on; therefore, the data memory should be initialized by an initialization routine.

Not Recommended for New Design

Example :Clears RAM to “00H”. (TMP86PM46NG)

```
            LD      HL, 0040H       ; Start address setup
            LD      A, H            ; Initial value (00H) setup
            LD      BC, 03FFH
SRAMCLR:    LD      (HL), A
            INC     HL
            DEC     BC
            JRS     F, SRAMCLR
```

2.2 System Clock Controller

The system clock controller consists of a clock generator, a timing generator, and a standby controller.

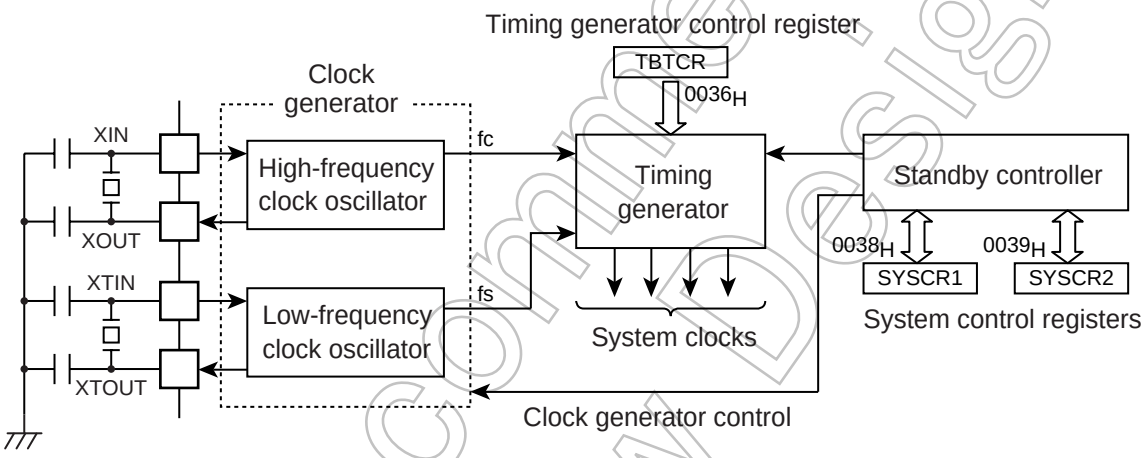

Figure 2-2 System Colck Control

2.2.1 Clock Generator

The clock generator generates the basic clock which provides the system clocks supplied to the CPU core and peripheral hardware. It contains two oscillation circuits: One for the high-frequency clock and one for the low-frequency clock. Power consumption can be reduced by switching of the standby controller to low-power operation based on the low-frequency clock.

The high-frequency (fc) clock and low-frequency (fs) clock can easily be obtained by connecting a resonator between the XIN/XOUT and XTIN/XTOUT pins respectively. Clock input from an external oscillator is also possible. In this case, external clock is applied to XIN/XTIN pin with XOUT/XTOUT pin not connected.

Not Recommended for New Design

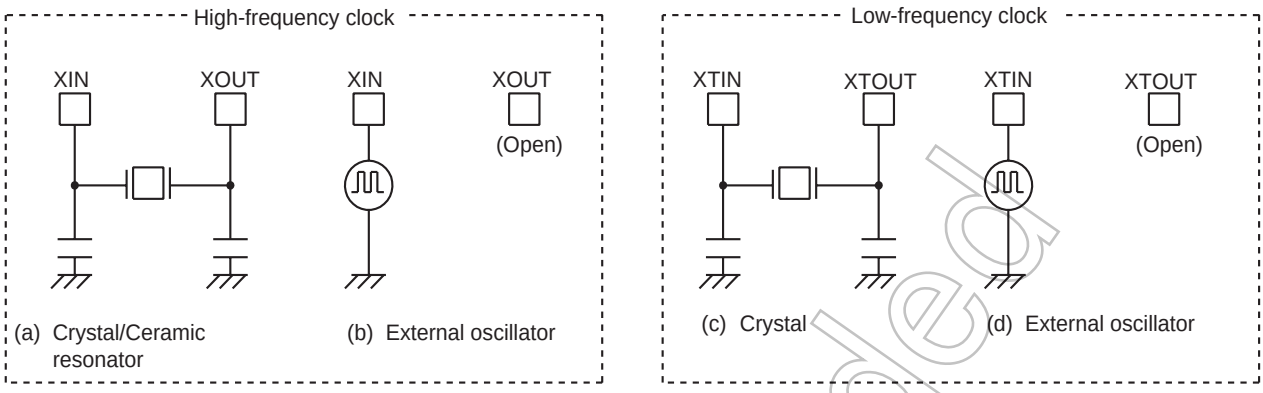

Figure 2-3 Examples of Resonator Connection

Note: The function to monitor the basic clock directly at external is not provided for hardware, however, with disabling all interrupts and watchdog timers, the oscillation frequency can be adjusted by monitoring the pulse which the fixed frequency is outputted to the port by the program.
The system to require the adjustment of the oscillation frequency should create the program for the adjustment in advance.

Not Recommended for New Design

2.2.2 Timing Generator

The timing generator generates the various system clocks supplied to the CPU core and peripheral hardware from the basic clock (fc or fs). The timing generator provides the following functions.

1. Generation of main system clock
2. Generation of divider output ($\overline{DVO}$) pulses
3. Generation of source clocks for time base timer
4. Generation of source clocks for watchdog timer
5. Generation of internal source clocks for timer/counters
6. Generation of warm-up clocks for releasing STOP mode

2.2.2.1 Configuration of timing generator

The timing generator consists of a 2-stage prescaler, a 21-stage divider, a main system clock generator, and machine cycle counters.

An input clock to the 7th stage of the divider depends on the operating mode, SYSCR2<SYSCK> and TBTCR<DV7CK>, that is shown in Figure 2-4. As reset and STOP mode started/canceled, the prescaler and the divider are cleared to “0”.

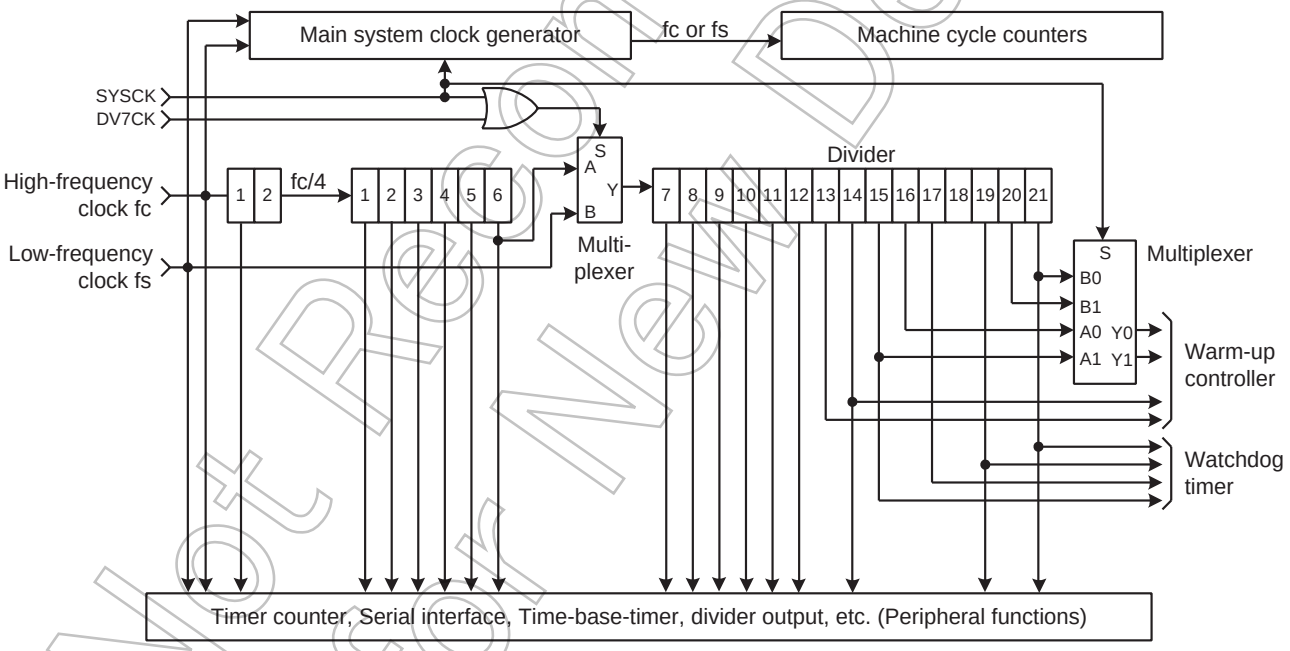

Figure 2-4 Configuration of Timing Generator

Not Recommended for New Design

Timing Generator Control Register

TBTCR (0036H)	7	6	5	4	3	2	1	0	
	(DVOEN)	(DVOCK)		DV7CK	(TBTEN)	(TBTCK)			(Initial value: 0000 0000)

DV7CK	Selection of input to the 7th stage of the divider	0: $fc/2^8$ [Hz] 1: fs	R/W

Note 1: In single clock mode, do not set DV7CK to "1".

Note 2: Do not set "1" on DV7CK while the low-frequency clock is not operated stably.

Note 3: fc: High-frequency clock [Hz], fs: Low-frequency clock [Hz], *: Don't care

Note 4: In SLOW1/2 and SLEEP1/2 modes, the DV7CK setting is ineffective, and fs is input to the 7th stage of the divider.

Note 5: When STOP mode is entered from NORMAL1/2 mode, the DV7CK setting is ineffective during the warm-up period after release of STOP mode, and the 6th stage of the divider is input to the 7th stage during this period.

2.2.2.2 Machine cycle

Instruction execution and peripheral hardware operation are synchronized with the main system clock.

The minimum instruction execution unit is called an "machine cycle". There are a total of 10 different types of instructions for the TLCS-870/C Series: Ranging from 1-cycle instructions which require one machine cycle for execution to 10-cycle instructions which require 10 machine cycles for execution. A machine cycle consists of 4 states (S0 to S3), and each state consists of one main system clock.

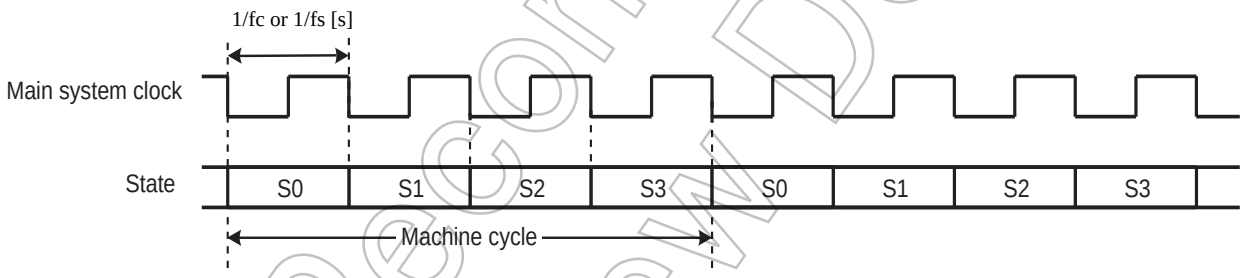

Figure 2-5 Machine Cycle

2.2.3 Operation Mode Control Circuit

The operation mode control circuit starts and stops the oscillation circuits for the high-frequency and low-frequency clocks, and switches the main system clock. There are three operating modes: Single clock mode, dual clock mode and STOP mode. These modes are controlled by the system control registers (SYSCR1 and SYSCR2). Figure 2-6 shows the operating mode transition diagram.

2.2.3.1 Single-clock mode

Only the oscillation circuit for the high-frequency clock is used, and P21 (XTIN) and P22 (XTOUT) pins are used as input/output ports. The main-system clock is obtained from the high-frequency clock. In the single-clock mode, the machine cycle time is 4/fc [s].

(1) NORMAL1 mode

In this mode, both the CPU core and on-chip peripherals operate using the high-frequency clock. The TMP86PM46NG is placed in this mode after reset.

Not Recommended for New Design

(2) IDLE1 mode

In this mode, the internal oscillation circuit remains active. The CPU and the watchdog timer are halted; however on-chip peripherals remain active (Operate using the high-frequency clock).

IDLE1 mode is started by SYSCR2<IDLE> = "1", and IDLE1 mode is released to NORMAL1 mode by an interrupt request from the on-chip peripherals or external interrupt inputs. When the IMF (Interrupt master enable flag) is “1” (Interrupt enable), the execution will resume with the acceptance of the interrupt, and the operation will return to normal after the interrupt service is completed. When the IMF is “0” (Interrupt disable), the execution will resume with the instruction which follows the IDLE1 mode start instruction.

(3) IDLE0 mode

In this mode, all the circuit, except oscillator and the timer-base-timer, stops operation.

This mode is enabled by SYSCR2<TGHALT> = "1".

When IDLE0 mode starts, the CPU stops and the timing generator stops feeding the clock to the peripheral circuits other than TBT. Then, upon detecting the falling edge of the source clock selected with TBTCR<TBTCK>, the timing generator starts feeding the clock to all peripheral circuits.

When returned from IDLE0 mode, the CPU restarts operating, entering NORMAL1 mode back again. IDLE0 mode is entered and returned regardless of how TBTCR<TBTEN> is set. When IMF = “1”, EF6 (TBT interrupt individual enable flag) = “1”, and TBTCR<TBTEN> = “1”, interrupt processing is performed. When IDLE0 mode is entered while TBTCR<TBTEN> = “1”, the INTTBT interrupt latch is set after returning to NORMAL1 mode.

2.2.3.2 Dual-clock mode

Both the high-frequency and low-frequency oscillation circuits are used in this mode. P21 (XTIN) and P22 (XTOUT) pins cannot be used as input/output ports. The main system clock is obtained from the high-frequency clock in NORMAL2 and IDLE2 modes, and is obtained from the low-frequency clock in SLOW and SLEEP modes. The machine cycle time is 4/fc [s] in the NORMAL2 and IDLE2 modes, and 4/fs [s] (122 μs at fs = 32.768 kHz) in the SLOW and SLEEP modes.

The TLCS-870/C is placed in the signal-clock mode during reset. To use the dual-clock mode, the low-frequency oscillator should be turned on at the start of a program.

(1) NORMAL2 mode

In this mode, the CPU core operates with the high-frequency clock. On-chip peripherals operate using the high-frequency clock and/or low-frequency clock.

(2) SLOW2 mode

In this mode, the CPU core operates with the low-frequency clock, while both the high-frequency clock and the low-frequency clock are operated. As the SYSCR2<SYSCK> becomes "1", the hardware changes into SLOW2 mode. As the SYSCR2<SYSCK> becomes “0”, the hardware changes into NORMAL2 mode. As the SYSCR2<XEN> becomes “0”, the hardware changes into SLOW1 mode. Do not clear SYSCR2<XTEN> to “0” during SLOW2 mode.

(3) SLOW1 mode

This mode can be used to reduce power-consumption by turning off oscillation of the high-frequency clock. The CPU core and on-chip peripherals operate using the low-frequency clock.

Not Recommended for New Design

Switching back and forth between SLOW1 and SLOW2 modes are performed by SYSCR2<XEN>. In SLOW1 and SLEEP modes, the input clock to the 1st stage of the divider is stopped; output from the 1st to 6th stages is also stopped.

(4) IDLE2 mode

In this mode, the internal oscillation circuit remain active. The CPU and the watchdog timer are halted; however, on-chip peripherals remain active (Operate using the high-frequency clock and/or the low-frequency clock). Starting and releasing of IDLE2 mode are the same as for IDLE1 mode, except that operation returns to NORMAL2 mode.

(5) SLEEP1 mode

In this mode, the internal oscillation circuit of the low-frequency clock remains active. The CPU, the watchdog timer, and the internal oscillation circuit of the high-frequency clock are halted; however, on-chip peripherals remain active (Operate using the low-frequency clock). Starting and releasing of SLEEP mode are the same as for IDLE1 mode, except that operation returns to SLOW1 mode. In SLOW1 and SLEEP1 modes, the input clock to the 1st stage of the divider is stopped; output from the 1st to 6th stages is also stopped.

(6) SLEEP2 mode

The SLEEP2 mode is the idle mode corresponding to the SLOW2 mode. The status under the SLEEP2 mode is same as that under the SLEEP1 mode, except for the oscillation circuit of the high-frequency clock.

(7) SLEEP0 mode

In this mode, all the circuit, except oscillator and the timer-base-timer, stops operation. This mode is enabled by setting “1” on bit SYSCR2<TGHALT>.

When SLEEP0 mode starts, the CPU stops and the timing generator stops feeding the clock to the peripheral circuits other than TBT. Then, upon detecting the falling edge of the source clock selected with TBTCR<TBTCK>, the timing generator starts feeding the clock to all peripheral circuits.

When returned from SLEEP0 mode, the CPU restarts operating, entering SLOW1 mode back again. SLEEP0 mode is entered and returned regardless of how TBTCR<TBTEN> is set. When IMF = “1”, EF6 (TBT interrupt individual enable flag) = “1”, and TBTCR<TBTEN> = “1”, interrupt processing is performed. When SLEEP0 mode is entered while TBTCR<TBTEN> = “1”, the INTTBT interrupt latch is set after returning to SLOW1 mode.

2.2.3.3 STOP mode

In this mode, the internal oscillation circuit is turned off, causing all system operations to be halted. The internal status immediately prior to the halt is held with a lowest power consumption during STOP mode.

STOP mode is started by the system control register 1 (SYSCR1), and STOP mode is released by a inputting (Either level-sensitive or edge-sensitive can be programmably selected) to the $\overline{\text{STOP}}$ pin. After the warm-up period is completed, the execution resumes with the instruction which follows the STOP mode start instruction.

Not Recommended for New Design

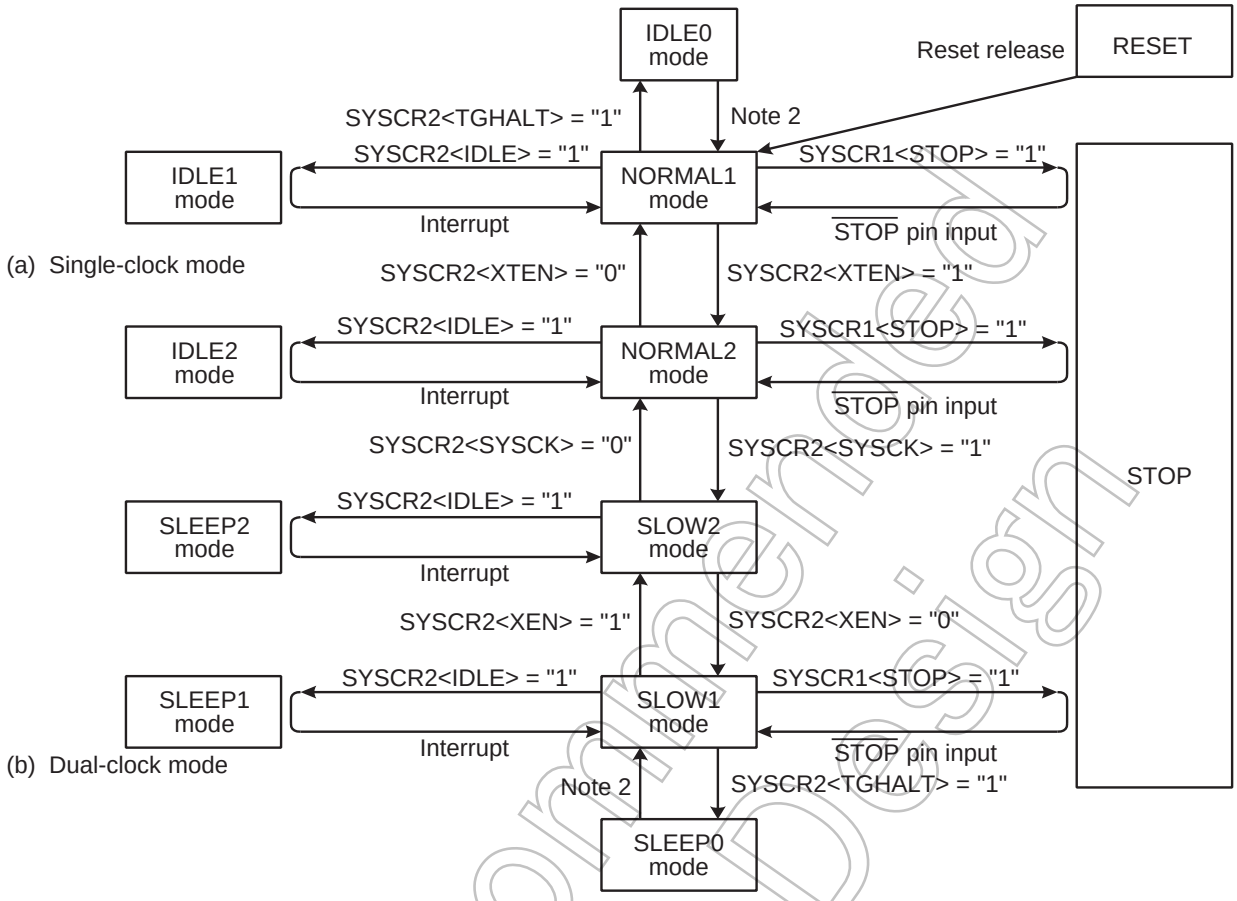

Note 1: NORMAL1 and NORMAL2 modes are generically called NORMAL; SLOW1 and SLOW2 are called SLOW; IDLE0, IDLE1 and IDLE2 are called IDLE; SLEEP0, SLEEP1 and SLEEP2 are called SLEEP.

Note 2: The mode is released by falling edge of TBTCR<TBTCK> setting.

Figure 2-6 Operating Mode Transition Diagram

Table 2-1 Operating Mode and Conditions

Operating Mode		Oscillator		CPU Core	TBT	Other Peripherals	Machine Cycle Time
		High Frequency	Low Frequency				
Single clock	RESET	Oscillation	Stop	Reset	Reset	Reset	4/fc [s]
	NORMAL1			Operate	Operate	Operate	
	IDLE1			Halt			
	IDLE0					Halt	
	STOP	Stop			Halt		–
Dual clock	NORMAL2	Oscillation	Oscillation	Operate with high frequency	Operate	Operate	4/fc [s]
	IDLE2			Halt			
	SLOW2			Operate with low frequency			4/fs [s]
	SLEEP2			Halt			
	SLOW1	Stop		Operate with low frequency			
	SLEEP1			Halt			
	SLEEP0					Halt	
	STOP		Stop		Halt		–

Not Recommended for New Design

System Control Register 1

SYSCR1 (0038H)	7	6	5	4	3	2	1	0
	STOP	RELM	RETM	OUTEN	WUT			

(Initial value: 0000 000*)

STOP	STOP mode start	0: CPU core and peripherals remain active 1: CPU core and peripherals are halted (Start STOP mode)			R/W
RELM	Release method for STOP mode	0: Edge-sensitive release 1: Level-sensitive release			R/W
RETM	Operating mode after STOP mode	0: Return to NORMAL1/2 mode 1: Return to SLOW1 mode			R/W
OUTEN	Port output during STOP mode	0: High impedance 1: Output kept			R/W
WUT	Warm-up time at releasing STOP mode		Return to NORMAL mode	Return to SLOW mode	R/W
		000	3×2^{16}/fc	3×2^{13}/fs	
		010	2^{16}/fc	2^{13}/fs	
		100	3×2^{14}/fc	3×2^{6}/fs	
		110	2^{14}/fc	2^{6}/fs	
		*01	3×2^{10}/fc	3×2^{6}/fs	
		*11	2^{10}/fc	2^{6}/fs	

Note 1: Always set RETM to “0” when transiting from NORMAL mode to STOP mode. Always set RETM to “1” when transiting from SLOW mode to STOP mode.

Note 2: When STOP mode is released with $\overline{\text{RESET}}$ pin input, a return is made to NORMAL1 regardless of the RETM contents.

Note 3: fc: High-frequency clock [Hz], fs: Low-frequency clock [Hz], *; Don’t care

Note 4: Bits 1 in SYSCR1 are read as undefined data when a read instruction is executed.

Note 5: As the hardware becomes STOP mode under OUTEN = “0”, input value is fixed to “0”; therefore it may cause external interrupt request on account of falling edge.

Note 6: When the key-on wakeup is used, RELM should be set to "1".

Note 7: Port P20 is used as $\overline{\text{STOP}}$ pin. Therefore, when stop mode is started, OUTEN does not affect to P20, and P20 becomes High-Z mode.

Note 8: The warmig-up time should be set correctly for using oscillator.

System Control Register 2

SYSCR2 (0039H)	7	6	5	4	3	2	1	0
	XEN	XTEN	SYSCK	IDLE		TGHALT		

(Initial value: 1000 *0**)

XEN	High-frequency oscillator control	0: Turn off oscillation 1: Turn on oscillation	R/W
XTEN	Low-frequency oscillator control	0: Turn off oscillation 1: Turn on oscillation	
SYSCK	Main system clock select (Write)/main system clock monitor (Read)	0: High-frequency clock (NORMAL1/NORMAL2/IDLE1/IDLE2) 1: Low-frequency clock (SLOW1/SLOW2/SLEEP1/SLEEP2)	
IDLE	CPU and watchdog timer control (IDLE1/2 and SLEEP1/2 modes)	0: CPU and watchdog timer remain active 1: CPU and watchdog timer are stopped (Start IDLE1/2 and SLEEP1/2 modes)	R/W
TGHALT	TG control (IDLE0 and SLEEP0 modes)	0: Feeding clock to all peripherals from TG 1: Stop feeding clock to peripherals except TBT from TG. (Start IDLE0 and SLEEP0 modes)	

Note 1: A reset is applied if both XEN and XTEN are cleared to “0”, XEN is cleared to “0” when SYSCK = “0”, or XTEN is cleared to “0” when SYSCK = “1”.

Note 2: *: Don’t care, TG: Timing generator, *; Don’t care

Note 3: Bits 3, 1 and 0 in SYSCR2 are always read as undefined value.

Note 4: Do not set IDLE and TGHALT to “1” simultaneously.

Note 5: Because returning from IDLE0/SLEEP0 to NORMAL1/SLOW1 is executed by the asynchronous internal clock, the period of IDLE0/SLEEP0 mode might be shorter than the period setting by TBTCR<TBTCK>.

Note 6: When IDLE1/2 or SLEEP1/2 mode is released, IDLE is automatically cleared to “0”.

Note 7: When IDLE0 or SLEEP0 mode is released, TGHALT is automatically cleared to “0”.

Not Recommended for New Design

Note 8: Before setting TGHALT to “1”, be sure to stop peripherals. If peripherals are not stopped, the interrupt latch of peripherals may be set after IDLE0 or SLEEP0 mode is released.

2.2.4 Operating Mode Control

2.2.4.1 STOP mode

STOP mode is controlled by the system control register 1, the $\overline{\text{STOP}}$ pin input and key-on wakeup input (STOP5 to STOP2) which is controlled by the STOP mode release control register (STOPCR).
The $\overline{\text{STOP}}$ pin is also used both as a port P20 and an $\overline{\text{INT5}}$ (external interrupt input 5) pin. STOP mode is started by setting SYSCR1<STOP> to “1”. During STOP mode, the following status is maintained.

1. Oscillations are turned off, and all internal operations are halted.
2. The data memory, registers, the program status word and port output latches are all held in the status in effect before STOP mode was entered.
3. The prescaler and the divider of the timing generator are cleared to “0”.
4. The program counter holds the address 2 ahead of the instruction (e.g., [SET (SYSCR1).7]) which started STOP mode.

STOP mode includes a level-sensitive mode and an edge-sensitive mode, either of which can be selected with the SYSCR1<RELM>. Do not use any key-on wakeup input (STOP5 to STOP2) for releasing STOP mode in edge-sensitive mode.

Note 1: The STOP mode can be released by either the STOP or key-on wakeup pin (STOP5 to STOP2). However, because the STOP pin is different from the key-on wakeup and can not inhibit the release input, the STOP pin must be used for releasing STOP mode.

Note 2: During STOP period (from start of STOP mode to end of warm up), due to changes in the external interrupt pin signal, interrupt latches may be set to “1” and interrupts may be accepted immediately after STOP mode is released. Before starting STOP mode, therefore, disable interrupts. Also, before enabling interrupts after STOP mode is released, clear unnecessary interrupt latches.

(1) Level-sensitive release mode (RELM = “1”)

In this mode, STOP mode is released by setting the $\overline{\text{STOP}}$ pin high or setting the STOP5 to STOP2 pin input which is enabled by STOPCR. This mode is used for capacitor backup when the main power supply is cut off and long term battery backup.

Even if an instruction for starting STOP mode is executed while $\overline{\text{STOP}}$ pin input is high or STOP5 to STOP2 input is low, STOP mode does not start but instead the warm-up sequence starts immediately. Thus, to start STOP mode in the level-sensitive release mode, it is necessary for the program to first confirm that the $\overline{\text{STOP}}$ pin input is low or STOP5 to STOP2 input is high. The following two methods can be used for confirmation.

1. Testing a port.
2. Using an external interrupt input $\overline{\text{INT5}}$ ($\overline{\text{INT5}}$ is a falling edge-sensitive input).

Example 1 :Starting STOP mode from NORMAL mode by testing a port P20.

```
            LD      (SYSCR1), 01010000B     ; Sets up the level-sensitive release mode
SSTOPH:     TEST    (P2PRD). 0              ; Wait until the STOP pin input goes low level
            JRS     F, SSTOPH
            DI                              ; IMF ← 0
            SET     (SYSCR1). 7             ; Starts STOP mode
```

Not Recommended for New Design

Example 2 :Starting STOP mode from NORMAL mode with an INT5 interrupt.

```
PINT5:    TEST    (P2PRD). 0          ; To reject noise, STOP mode does not start if
          JRS     F, SINT5              port P20 is at high
          LD      (SYSCR1), 01010000B ; Sets up the level-sensitive release mode.
          DI                          ; IMF ← 0
          SET     (SYSCR1). 7         ; Starts STOP mode
SINT5:    RETI
```

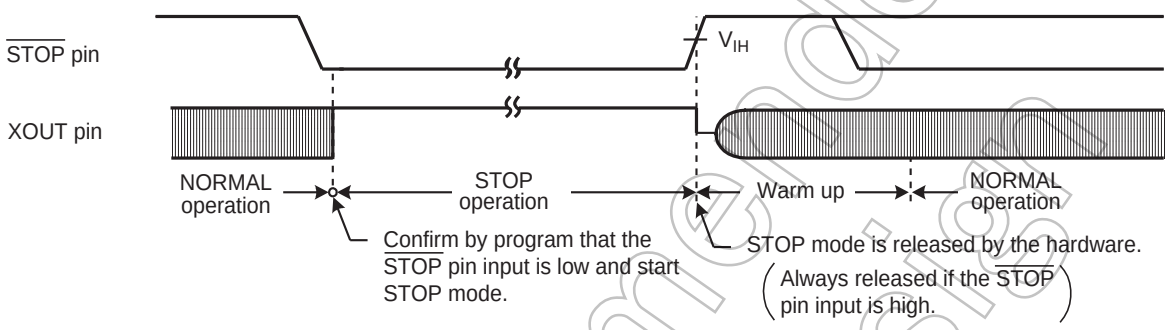

Figure 2-7 Level-sensitive Release Mode

Note 1: Even if the $\overline{\text{STOP}}$ pin input is low after warm-up start, the STOP mode is not restarted.

Note 2: In this case of changing to the level-sensitive mode from the edge-sensitive mode, the release mode is not switched until a rising edge of the $\overline{\text{STOP}}$ pin input is detected.

(2) Edge-sensitive release mode (RELM = “0”)

In this mode, STOP mode is released by a rising edge of the $\overline{\text{STOP}}$ pin input. This is used in applications where a relatively short program is executed repeatedly at periodic intervals. This periodic signal (for example, a clock from a low-power consumption oscillator) is input to the $\overline{\text{STOP}}$ pin. In the edge-sensitive release mode, STOP mode is started even when the $\overline{\text{STOP}}$ pin input is high level. Do not use any STOP5 to STOP2 pin input for releasing STOP mode in edge-sensitive release mode.

Example :Starting STOP mode from NORMAL mode

```
          DI                          ; IMF ← 0
          LD      (SYSCR1), 10010000B ; Starts after specified to the edge-sensitive release mode
```

Not Recommended for New Design

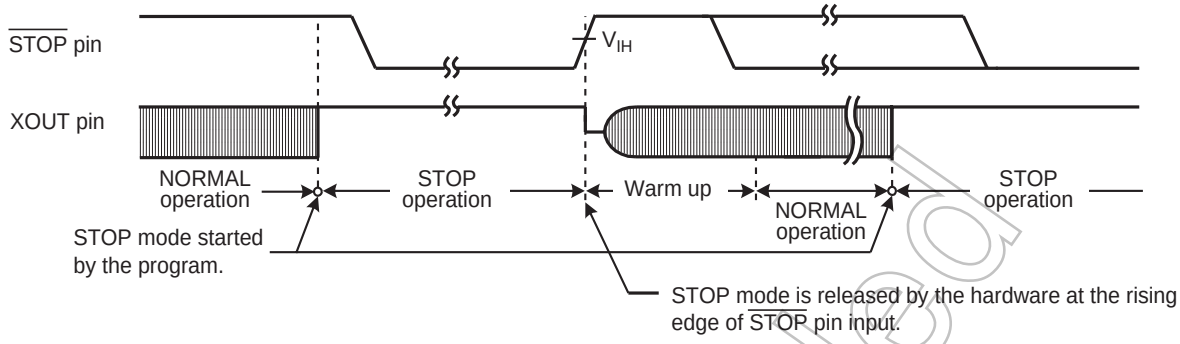

Figure 2-8 Edge-sensitive Release Mode

STOP mode is released by the following sequence.

1. In the dual-clock mode, when returning to NORMAL2, both the high-frequency and low-frequency clock oscillators are turned on; when returning to SLOW1 mode, only the low-frequency clock oscillator is turned on. In the single-clock mode, only the high-frequency clock oscillator is turned on.
2. A warm-up period is inserted to allow oscillation time to stabilize. During warm up, all internal operations remain halted. Six different warm-up times can be selected with the SYSCR1<WUT> in accordance with the resonator characteristics.
3. When the warm-up time has elapsed, normal operation resumes with the instruction following the STOP mode start instruction.

Note 1: When the STOP mode is released, the start is made after the prescaler and the divider of the timing generator are cleared to "0".

Note 2: STOP mode can also be released by inputting low level on the $\overline{\text{RESET}}$ pin, which immediately performs the normal reset operation.

Note 3: When STOP mode is released with a low hold voltage, the following cautions must be observed. The power supply voltage must be at the operating voltage level before releasing STOP mode. The $\overline{\text{RESET}}$ pin input must also be “H” level, rising together with the power supply voltage. In this case, if an external time constant circuit has been connected, the $\overline{\text{RESET}}$ pin input voltage will increase at a slower pace than the power supply voltage. At this time, there is a danger that a reset may occur if input voltage level of the $\overline{\text{RESET}}$ pin drops below the non-inverting high-level input voltage (Hysteresis input).

Table 2-2 Warm-up Time Example (at fc = 16.0 MHz, fs = 32.768 kHz)

WUT	Warm-up Time [ms]	
	Return to NORMAL Mode	Return to SLOW Mode
000	12.288	750
010	4.096	250
100	3.072	5.85
110	1.024	1.95
*01	0.192	5.9
*11	0.064	2.0

Note 1: The warm-up time is obtained by dividing the basic clock by the divider. Therefore, the warm-up time may include a certain amount of error if there is any fluctuation of the oscillation frequency when STOP mode is released. Thus, the warm-up time must be considered as an approximate value.

Not Recommended for New Design

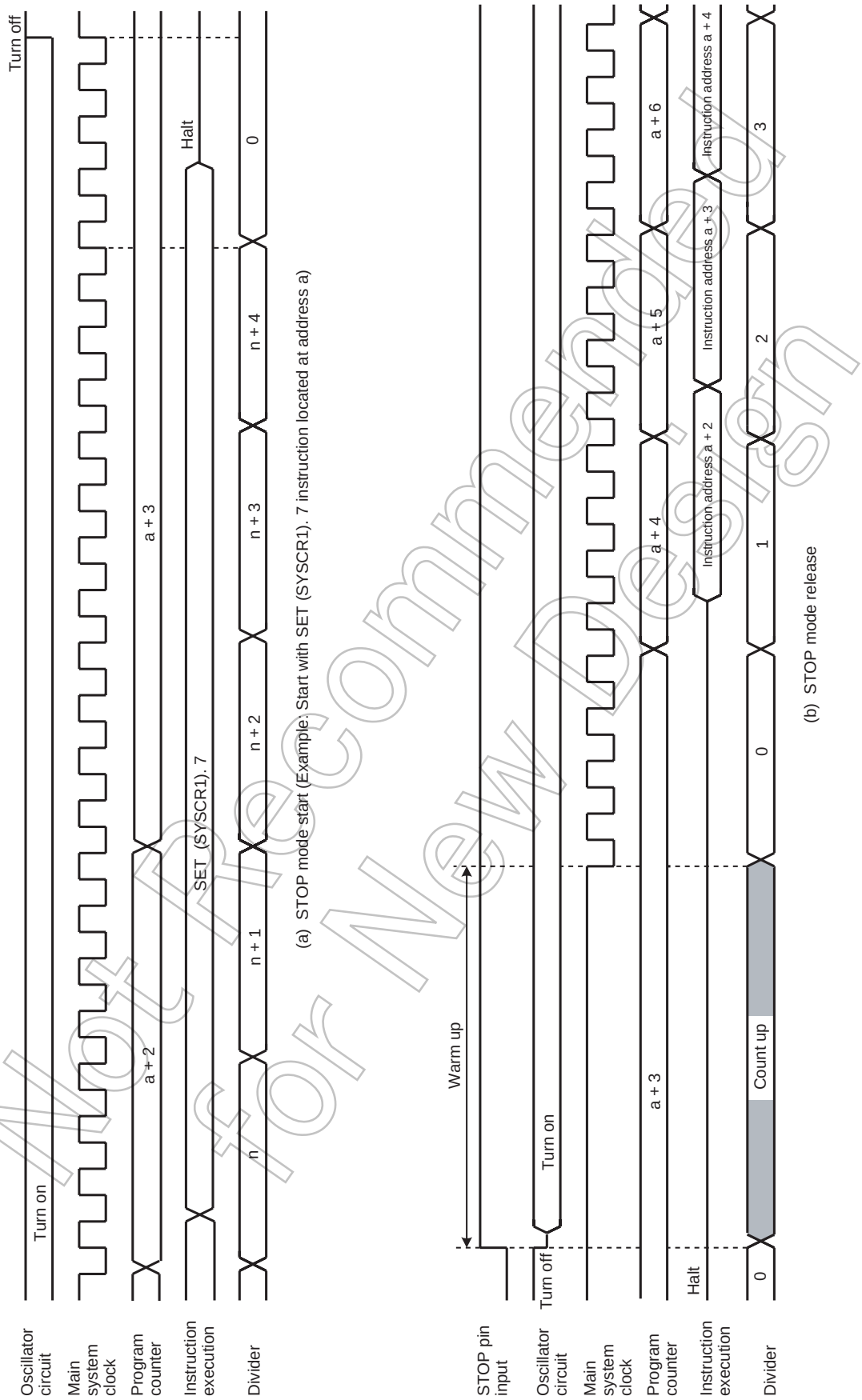

Figure 2-9 STOP Mode Start/Release

Not Recommended for New Design

2.2.4.2 IDLE1/2 mode and SLEEP1/2 mode

IDLE1/2 and SLEEP1/2 modes are controlled by the system control register 2 (SYSCR2) and maskable interrupts. The following status is maintained during these modes.

1. Operation of the CPU and watchdog timer (WDT) is halted. On-chip peripherals continue to operate.
2. The data memory, CPU registers, program status word and port output latches are all held in the status in effect before these modes were entered.
3. The program counter holds the address 2 ahead of the instruction which starts these modes.

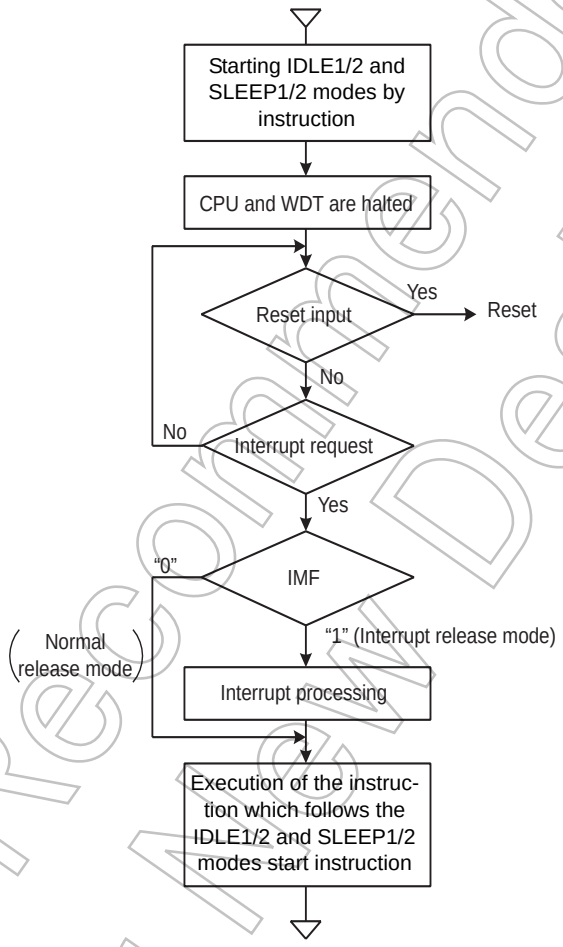

Figure 2-10 IDLE1/2 and SLEEP1/2 Modes

Not Recommended for New Design

- Start the IDLE1/2 and SLEEP1/2 modes

  After IMF is set to "0", set the individual interrupt enable flag (EF) which releases IDLE1/2 and SLEEP1/2 modes. To start IDLE1/2 and SLEEP1/2 modes, set SYSCR2<IDLE> to “1”.

- Release the IDLE1/2 and SLEEP1/2 modes

  IDLE1/2 and SLEEP1/2 modes include a normal release mode and an interrupt release mode. These modes are selected by interrupt master enable flag (IMF). After releasing IDLE1/2 and SLEEP1/2 modes, the SYSCR2<IDLE> is automatically cleared to “0” and the operation mode is returned to the mode preceding IDLE1/2 and SLEEP1/2 modes.

  IDLE1/2 and SLEEP1/2 modes can also be released by inputting low level on the $\overline{\text{RESET}}$ pin. After releasing reset, the operation mode is started from NORMAL1 mode.

(1) Normal release mode (IMF = “0”)

IDLE1/2 and SLEEP1/2 modes are released by any interrupt source enabled by the individual interrupt enable flag (EF). After the interrupt is generated, the program operation is resumed from the instruction following the IDLE1/2 and SLEEP1/2 modes start instruction. Normally, the interrupt latches (IL) of the interrupt source used for releasing must be cleared to “0” by load instructions.

(2) Interrupt release mode (IMF = “1”)

IDLE1/2 and SLEEP1/2 modes are released by any interrupt source enabled with the individual interrupt enable flag (EF) and the interrupt processing is started. After the interrupt is processed, the program operation is resumed from the instruction following the instruction, which starts IDLE1/2 and SLEEP1/2 modes.

Note: When a watchdog timer interrupts is generated immediately before IDLE1/2 and SLEEP1/2 modes are started, the watchdog timer interrupt will be processed but IDLE1/2 and SLEEP1/2 modes will not be started.

Not Recommended for New Design

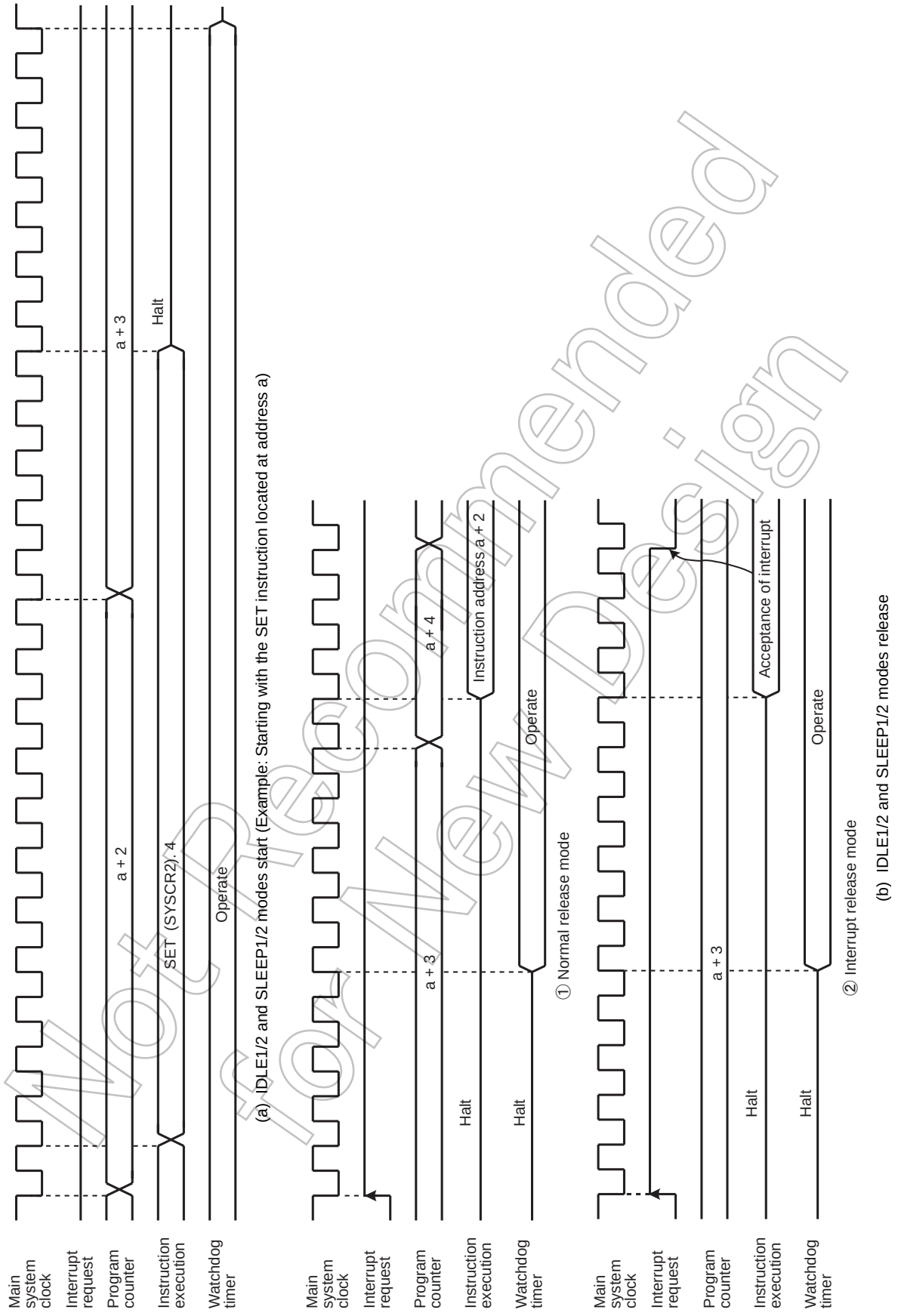

Figure 2-11 IDLE1/2 and SLEEP1/2 Modes Start/Release

Not Recommended for New Design

2.2.4.3 IDLE0 and SLEEP0 modes (IDLE0, SLEEP0)

IDLE0 and SLEEP0 modes are controlled by the system control register 2 (SYSCR2) and the time base timer control register (TBTCR). The following status is maintained during IDLE0 and SLEEP0 modes.

1. Timing generator stops feeding clock to peripherals except TBT.
2. The data memory, CPU registers, program status word and port output latches are all held in the status in effect before IDLE0 and SLEEP0 modes were entered.
3. The program counter holds the address 2 ahead of the instruction which starts IDLE0 and SLEEP0 modes.

Note: Before starting IDLE0 or SLEEP0 mode, be sure to stop (Disable) peripherals.

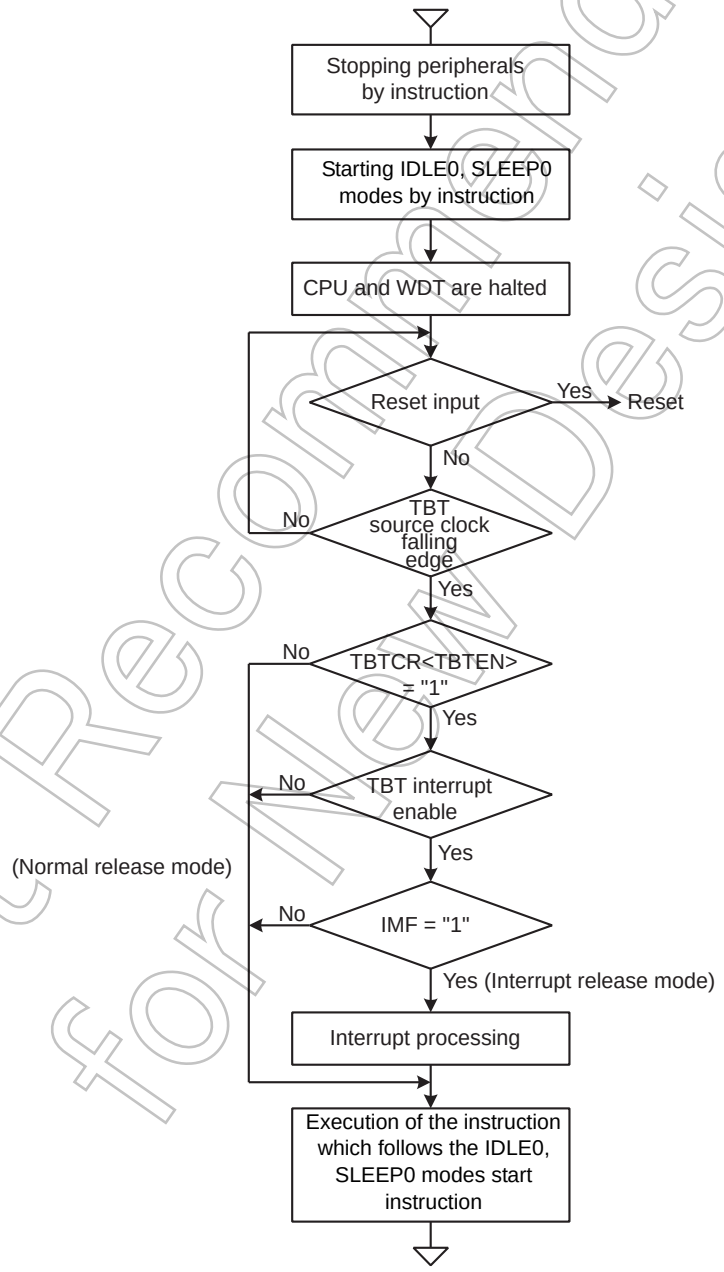

Figure 2-12 IDLE0 and SLEEP0 Modes

Not Recommended for New Design

- Start the IDLE0 and SLEEP0 modes

  Stop (Disable) peripherals such as a timer counter.

  To start IDLE0 and SLEEP0 modes, set SYSCR2<TGHALT> to “1”.

- Release the IDLE0 and SLEEP0 modes

  IDLE0 and SLEEP0 modes include a normal release mode and an interrupt release mode.

  These modes are selected by interrupt master flag (IMF), the individual interrupt enable flag of TBT and TBTCR<TBTEN>.

  After releasing IDLE0 and SLEEP0 modes, the SYSCR2<TGHALT> is automatically cleared to “0” and the operation mode is returned to the mode preceding IDLE0 and SLEEP0 modes. Before starting the IDLE0 or SLEEP0 mode, when the TBTCR<TBTEN> is set to “1”, INTTBT interrupt latch is set to “1”.

  IDLE0 and SLEEP0 modes can also be released by inputting low level on the $\overline{\text{RESET}}$ pin. After releasing reset, the operation mode is started from NORMAL1 mode.

Note: IDLE0 and SLEEP0 modes start/release without reference to TBTCR<TBTEN> setting.

(1) Normal release mode (IMF•EF6•TBTCR<TBTEN> = “0”)

IDLE0 and SLEEP0 modes are released by the source clock falling edge, which is setting by the TBTCR<TBTCK>. After the falling edge is detected, the program operation is resumed from the instruction following the IDLE0 and SLEEP0 modes start instruction. Before starting the IDLE0 or SLEEP0 mode, when the TBTCR<TBTEN> is set to “1”, INTTBT interrupt latch is set to “1”.

(2) Interrupt release mode (IMF•EF6•TBTCR<TBTEN> = “1”)

IDLE0 and SLEEP0 modes are released by the source clock falling edge, which is setting by the TBTCR<TBTCK> and INTTBT interrupt processing is started.

Note 1: Because returning from IDLE0, SLEEP0 to NORMAL1, SLOW1 is executed by the asynchronous internal clock, the period of IDLE0, SLEEP0 mode might be the shorter than the period setting by TBTCR<TBTCK>.

Note 2: When a watchdog timer interrupt is generated immediately before IDLE0/SLEEP0 mode is started, the watchdog timer interrupt will be processed but IDLE0/SLEEP0 mode will not be started.

Not Recommended for New Design

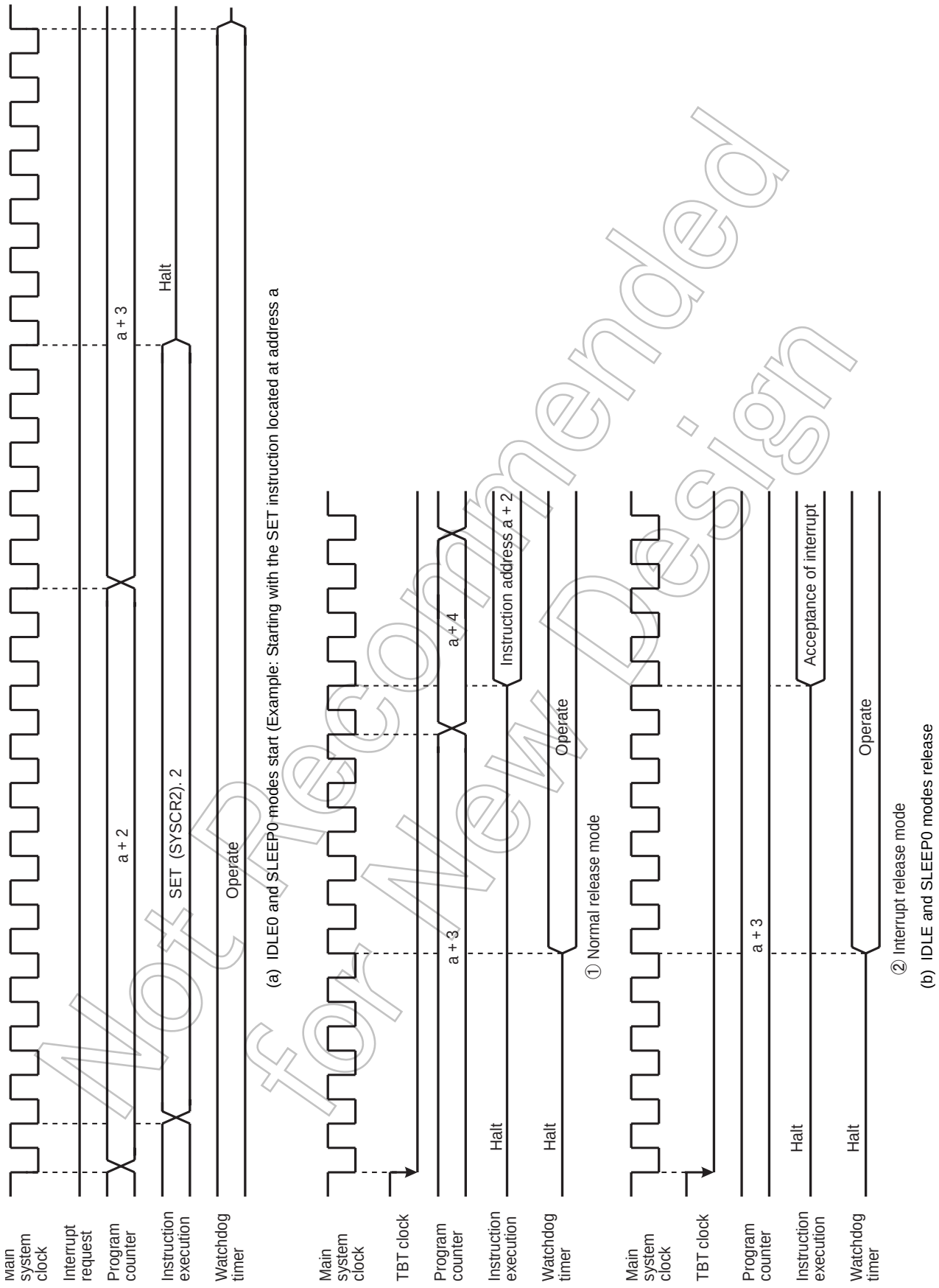

Not Recommended for New Design

Figure 2-13 IDLE0 and SLEEP0 Modes Start/Release

2.2.4.4 SLOW mode

SLOW mode is controlled by the system control register 2 (SYSCR2).

The following is the methods to switch the mode with the warm-up counter.

(1) Switching from NORMAL2 mode to SLOW1 mode

First, set SYSCR2<SYSCK> to switch the main system clock to the low-frequency clock for SLOW2 mode. Next, clear SYSCR2<XEN> to turn off high-frequency oscillation.

Note: The high-frequency clock can be continued oscillation in order to return to NORMAL2 mode from SLOW mode quickly. Always turn off oscillation of high-frequency clock when switching from SLOW mode to stop mode.

Example 1 :Switching from NORMAL2 mode to SLOW1 mode.

```
        SET     (SYSCR2). 5     ; SYSCR2<SYSCK> ← 1
                                  (Switches the main system clock to the low-frequency
                                  clock for SLOW2)

        CLR     (SYSCR2). 7     ; SYSCR2<XEN> ← 0
                                  (Turns off high-frequency oscillation)
```

Example 2 :Switching to the SLOW1 mode after low-frequency clock has stabilized.

```
        SET     (SYSCR2). 6     ; SYSCR2<XTEN> ← 1

        LD      (TC3CR), 43H    ; Sets mode for TC4, 3 (16-bit mode, fs for source)

        LD      (TC4CR), 05H    ; Sets warming-up counter mode

        LDW     (TTREG3), 8000H ; Sets warm-up time (Depend on oscillator accompanied)

        DI                      ; IMF ← 0

        SET     (EIRH). 1       ; Enables INTTC4

        EI                      ; IMF ← 1

        SET     (TC4CR). 3      ; Starts TC4, 3

        :

PINTTC4: CLR    (TC4CR). 3      ; Stops TC4, 3

        SET     (SYSCR2). 5     ; SYSCR2<SYSCK> ← 1
                                  (Switches the main system clock to the low-frequency clock)

        CLR     (SYSCR2). 7     ; SYSCR2<XEN> ← 0
                                  (Turns off high-frequency oscillation)

        RETI

        :

VINTTC4: DW     PINTTC4         ; INTTC4 vector table
```

Not Recommended for New Design

(2) Switching from SLOW1 mode to NORMAL2 mode

First, set SYSCR2<XEN> to turn on the high-frequency oscillation. When time for stabilization (Warm up) has been taken by the timer/counter (TC4,TC3), clear SYSCR2<SYSCK> to switch the main system clock to the high-frequency clock.
SLOW mode can also be released by inputting low level on the $\overline{\text{RESET}}$ pin. After releasing reset, the operation mode is started from NORMAL1 mode.

Note: After SYSCK is cleared to "0", executing the instructions is continiued by the low-frequency clock for the period synchronized with low-frequency and high-frequency clocks.

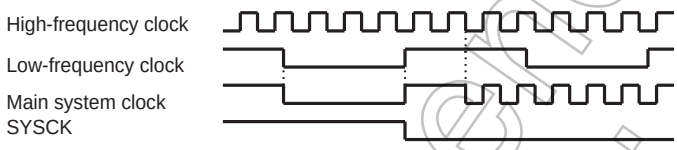

Example :Switching from the SLOW1 mode to the NORMAL2 mode (fc = 16 MHz, warm-up time is 4.0 ms).

```
            SET     (SYSCR2). 7      ; SYSCR2<XEN> ← 1 (Starts high-frequency oscillation)
            LD      (TC3CR), 63H     ; Sets mode for TC4, 3 (16-bit mode, fc for source)
            LD      (TC4CR), 05H     ; Sets warming-up counter mode
            LD      (TTREG4), 0F8H   ; Sets warm-up time
            DI                       ; IMF ← 0
            SET     (EIRH). 1        ; Enables INTTC4
            EI                       ; IMF ← 1
            SET     (TC4CR). 3       ; Starts TC4, 3
             :
PINTTC4:    CLR     (TC4CR). 3       ; Stops TC4, 3
            CLR     (SYSCR2). 5      ; SYSCR2<SYSCK> ← 0
                                       (Switches the main system clock to the high-frequency clock)
            RETI
             :
VINTTC4:    DW      PINTTC4          ; INTTC4 vector table
```

Not Recommended for New Design

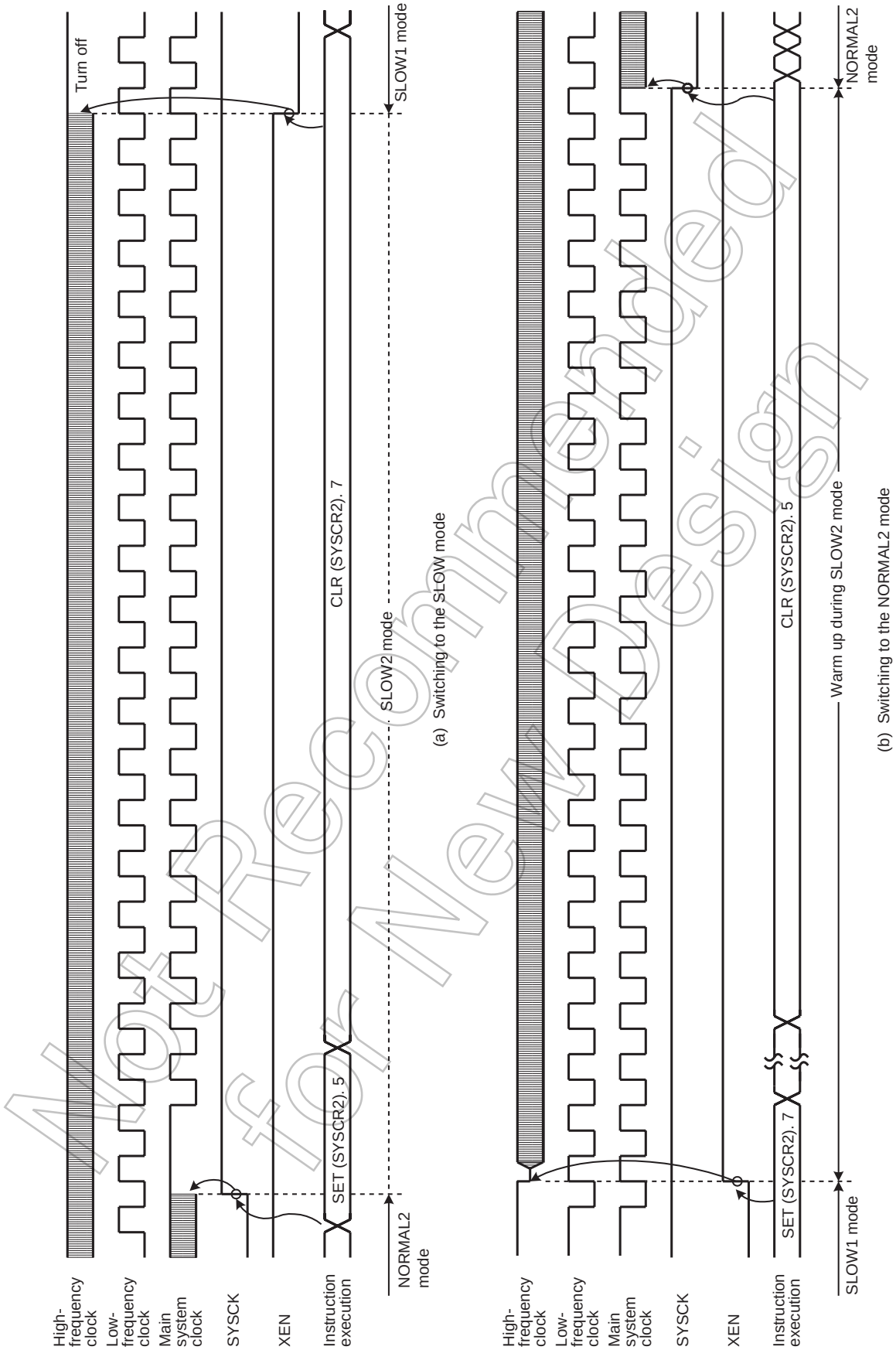

Figure 2-14 Switching between the NORMAL2 and SLOW Modes

Not Recommended for New Design

2.3 Reset Circuit

The TMP86PM46NG has four types of reset generation procedures: An external reset input, an address trap reset, a watchdog timer reset and a system clock reset. Of these reset, the address trap reset, the watchdog timer and the system clock reset are a malfunction reset. When the malfunction reset request is detected, reset occurs during the maximum 24/fc[s] (The $\overline{\text{RESET}}$ pin outputs "L" level).

The malfunction reset circuit such as watchdog timer reset, address trap reset and system clock reset is not initialized when power is turned on. Therefore, reset may occur during maximum 24/fc[s] (1.5μs at 16.0 MHz) when power is turned on. $\overline{\text{RESET}}$ pin outputs "L" level during maximum 24/fc[s] (1.5μs at 16.0MHz).

Table 2-3 shows on-chip hardware initialization by reset action.

Table 2-3 Initializing Internal Status by Reset Action

On-chip Hardware	Initial Value	On-chip Hardware	Initial Value
Program counter (PC)	(FFFEH)	Prescaler and divider of timing generator	0
Stack pointer (SP)	Not initialized		
General-purpose registers (W, A, B, C, D, E, H, L, IX, IY)	Not initialized		
Jump status flag (JF)	Not initialized	Watchdog timer	Enable
Zero flag (ZF)	Not initialized	Output latches of I/O ports	Refer to I/O port circuitry
Carry flag (CF)	Not initialized		
Half carry flag (HF)	Not initialized		
Sign flag (SF)	Not initialized		
Overflow flag (VF)	Not initialized		
Interrupt master enable flag (IMF)	0		
Interrupt individual enable flags (EF)	0	Control registers	Refer to each of control register
Interrupt latches (IL)	0		
		RAM	Not initialized

2.3.1 External Reset Input

The $\overline{\text{RESET}}$ pin contains a Schmitt trigger (Hysteresis) with an internal pull-up resistor.

When the $\overline{\text{RESET}}$ pin is held at “L” level for at least 3 machine cycles (12/fc [s]) with the power supply voltage within the operating voltage range and oscillation stable, a reset is applied and the internal state is initialized.

When the $\overline{\text{RESET}}$ pin input goes high, the reset operation is released and the program execution starts at the vector address stored at addresses FFFEH to FFFFH.

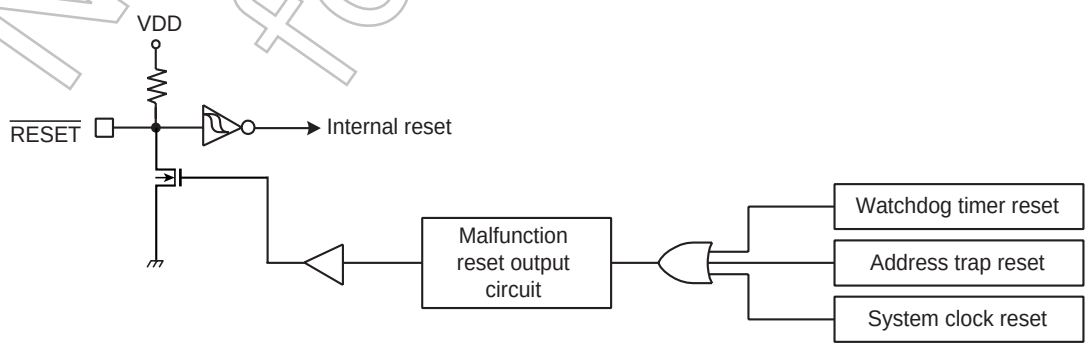

Figure 2-15 Reset Circuit

Not Recommended for New Design

2.3.2 Address trap reset

If the CPU should start looping for some cause such as noise and an attempt be made to fetch an instruction from the on-chip RAM (when WDTCR1<ATAS> is set to “1”) or the SFR area, address trap reset will be generated. The reset time is maximum 24/fc[s] (1.5μs at 16.0 MHz). Then, the $\overline{\text{RESET}}$ pin outputs "L" level during maximum 24/fc[s].

Note: The operating mode under address trapped is alternative of reset or interrupt. The address trap area is alternative.

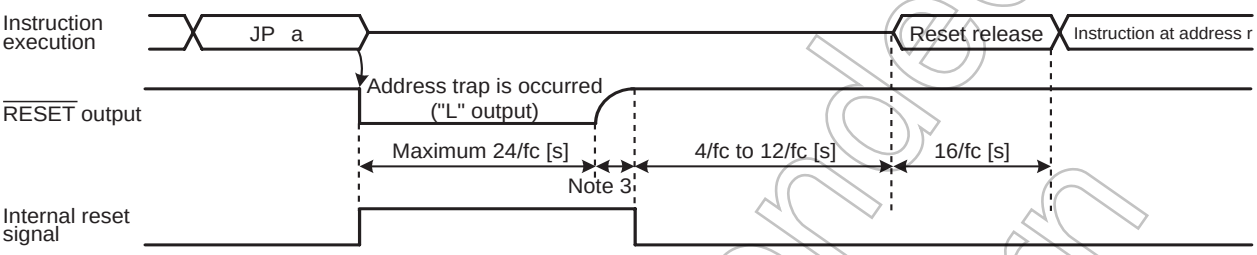

Note 1: Address “a” is in the SFR or on-chip RAM (WDTCR1<ATAS> = “1”) space.
Note 2: During reset release, reset vector “r” is read out, and an instruction at address “r” is fetched and decoded.
Note 3: Varies on account of external condition: voltage or capacitance

Figure 2-16 Address Trap Reset

2.3.3 Watchdog timer reset

Refer to Section “Watchdog Timer”.

2.3.4 System clock reset

If the condition as follows is detected, the system clock reset occurs automatically to prevent dead lock of the CPU. (The oscillation is continued without stopping.)

- In case of clearing SYSCR2<XEN> and SYSCR2<XTEN> simultaneously to “0”.
- In case of clearing SYSCR2<XEN> to “0”, when the SYSCR2<SYSCK> is “0”.
- In case of clearing SYSCR2<XTEN> to “0”, when the SYSCR2<SYSCK> is “1”.

The reset time is maximum 24/fc (1.5 μs at 16.0 MHz). Then, the $\overline{\text{RESET}}$ pin outputs "L" level during maximum 24/fc[s] (1.5μs at 16.0MHz).

Not Recommended for New Design

Not Recommended
for New Design

Not Recommended for New Design

3. Interrupt Control Circuit

The TMP86PM46NG has a total of 18 interrupt sources excluding reset, of which 2 source levels are multiplexed. Interrupts can be nested with priorities. Four of the internal interrupt sources are non-maskable while the rest are maskable.

Interrupt sources are provided with interrupt latches (IL), which hold interrupt requests, and independent vectors. The interrupt latch is set to “1” by the generation of its interrupt request which requests the CPU to accept its interrupts. Interrupts are enabled or disabled by software using the interrupt master enable flag (IMF) and interrupt enable flag (EF). If more than one interrupts are generated simultaneously, interrupts are accepted in order which is dominated by hardware. However, there are no prioritized interrupt factors among non-maskable interrupts.

Interrupt Factors		Enable Condition	Interrupt Latch	Vector Address	Priority
Internal/External	(Reset)	Non-maskable	–	FFFE	1
Internal	INTSWI (Software interrupt)	Non-maskable	–	FFFC	2
Internal	INTUNDEF (Executed the undefined instruction interrupt)	Non-maskable	–	FFFC	2
Internal	INTATRAP (Address trap interrupt)	Non-maskable	IL2	FFFA	2
Internal	INTWDT (Watchdog timer interrupt)	Non-maskable	IL3	FFF8	2
External	$\overline{\text{INT0}}$	IMF• EF4 = 1, INT0EN = 1	IL4	FFF6	5
External	INT1	IMF• EF5 = 1	IL5	FFF4	6
Internal	INTTBT	IMF• EF6 = 1	IL6	FFF2	7
Internal	INTTC1	IMF• EF7 = 1	IL7	FFF0	8
External	INT2	IMF• EF8 = 1	IL8	FFEE	9
Internal	INTTC4	IMF• EF9 = 1	IL9	FFEC	10
Internal	INTTC3	IMF• EF10 = 1	IL10	FFEA	11
External	INT3	IMF• EF11 = 1	IL11	FFE8	12
Internal	INTSIO	IMF• EF12 = 1	IL12	FFE6	13
Internal	INTRXD	IMF• EF13 = 1	IL13	FFE4	14
External	INT4	IMF• EF14 = 1, IL14ER = 0	IL14	FFE2	15
Internal	INTTXD	IMF• EF14 = 1, IL14ER = 1			
External	$\overline{\text{INT5}}$	IMF• EF15 = 1, IL15ER = 0	IL15	FFE0	16
Internal	INTADC	IMF• EF15 = 1, IL15ER = 1			

Note 1: The INTSEL register is used to select the interrupt source to be enabled for each multiplexed source level (see 3.3 Interrupt Source Selector (INTSEL)).

Note 2: To use the address trap interrupt (INTATRAP), clear WDTCR1<ATOUT> to “0” (It is set for the “reset request” after reset is cancelled). For details, see “Address Trap”.

Note 3: To use the watchdog timer interrupt (INTWDT), clear WDTCR1<WDTOUT> to "0" (It is set for the "Reset request" after reset is released). For details, see "Watchdog Timer".

3.1 Interrupt latches (IL15 to IL2)

An interrupt latch is provided for each interrupt source, except for a software interrupt and an executed the undefined instruction interrupt. When interrupt request is generated, the latch is set to “1”, and the CPU is requested to accept the interrupt if its interrupt is enabled. The interrupt latch is cleared to "0" immediately after accepting interrupt. All interrupt latches are initialized to “0” during reset.

The interrupt latches are located on address 003CH and 003DH in SFR area. Each latch can be cleared to "0" individually by instruction. However, IL2 and IL3 should not be cleared to "0" by software. For clearing the interrupt latch, load instruction should be used and then IL2 and IL3 should be set to "1". If the read-modify-write instructions such as bit manipulation or operation instructions are used, interrupt request would be cleared inadequately if interrupt is requested while such instructions are executed.

Interrupt latches are not set to “1” by an instruction.

Not Recommended for New Design

Since interrupt latches can be read, the status for interrupt requests can be monitored by software.

Note: In main program, before manipulating the interrupt enable flag (EF) or the interrupt latch (IL), be sure to clear IMF to "0" (Disable interrupt by DI instruction). Then set IMF newly again as required after operating on the EF or IL (Enable interrupt by EI instruction)
In interrupt service routine, because the IMF becomes "0" automatically, clearing IMF need not execute normally on interrupt service routine. However, if using multiple interrupt on interrupt service routine, manipulating EF or IL should be executed before setting IMF="1".

Example 1 :Clears interrupt latches

```
DI                                  ; IMF ← 0
LDW     (ILL), 1110100000111111B    ; IL12, IL10 to IL6 ← 0
EI                                  ; IMF ← 1
```

Example 2 :Reads interrupt latchess

```
LD      WA, (ILL)                   ; W ← ILH, A ← ILL
```

Example 3 :Tests interrupt latches

```
TEST    (ILL). 7                    ; if IL7 = 1 then jump
JR      F, SSET
```

3.2 Interrupt enable register (EIR)

The interrupt enable register (EIR) enables and disables the acceptance of interrupts, except for the non-maskable interrupts (Software interrupt, undefined instruction interrupt, address trap interrupt and watchdog interrupt). Non-maskable interrupt is accepted regardless of the contents of the EIR.

The EIR consists of an interrupt master enable flag (IMF) and the individual interrupt enable flags (EF). These registers are located on address 003AH and 003BH in SFR area, and they can be read and written by an instructions (Including read-modify-write instructions such as bit manipulation or operation instructions).

3.2.1 Interrupt master enable flag (IMF)

The interrupt enable register (IMF) enables and disables the acceptance of the whole maskable interrupt. While IMF = “0”, all maskable interrupts are not accepted regardless of the status on each individual interrupt enable flag (EF). By setting IMF to “1”, the interrupt becomes acceptable if the individuals are enabled. When an interrupt is accepted, IMF is cleared to “0” after the latest status on IMF is stacked. Thus the maskable interrupts which follow are disabled. By executing return interrupt instruction [RETI/RETN], the stacked data, which was the status before interrupt acceptance, is loaded on IMF again.

The IMF is located on bit0 in EIRL (Address: 003AH in SFR), and can be read and written by an instruction. The IMF is normally set and cleared by [EI] and [DI] instruction respectively. During reset, the IMF is initialized to “0”.

3.2.2 Individual interrupt enable flags (EF15 to EF4)

Each of these flags enables and disables the acceptance of its maskable interrupt. Setting the corresponding bit of an individual interrupt enable flag to “1” enables acceptance of its interrupt, and setting the bit to “0” disables acceptance. During reset, all the individual interrupt enable flags (EF15 to EF4) are initialized to “0” and all maskable interrupts are not accepted until they are set to “1”.

Note: In main program, before manipulating the interrupt enable flag (EF) or the interrupt latch (IL), be sure to clear IMF to "0" (Disable interrupt by DI instruction). Then set IMF newly again as required after operating on the EF or IL (Enable interrupt by EI instruction)
In interrupt service routine, because the IMF becomes "0" automatically, clearing IMF need not execute normally on interrupt service routine. However, if using multiple interrupt on interrupt service routine, manipulating EF or IL should be executed before setting IMF="1".

Not Recommended for New Design

Example 1 :Enables interrupts individually and sets IMF

```
DI                                          ; IMF ← 0

LDW        (EIRL), 1110100010100000B        ; EF15 to EF13, EF11, EF7, EF5 ← 1
  :                                           Note: IMF should not be set.

  :

EI                                          ; IMF ← 1
```

Example 2 :C compiler description example

```
unsigned  int  _io (3AH)  EIRL;             /* 3AH shows EIRL address */

_DI();

EIRL = 10100000B;

  :

_EI();
```

Not Recommended for New Design

Interrupt Latches

(Initial value: 00000000 000000**)

ILH,ILL (003DH, 003CH)	15	14	13	12	11	10	9	8	7	6	5	4	3	2	1	0
	IL15	IL14	IL13	IL12	IL11	IL10	IL9	IL8	IL7	IL6	IL5	IL4	IL3	IL2		
	ILH (003DH)								ILL (003CH)							

		at RD	at WR	
IL15 to IL2	Interrupt latches	0: No interrupt request 1: Interrupt request	0: Clears the interrupt request 1: (Interrupt latch is not set.)	R/W

Note 1: To clear any one of bits IL7 to IL4, be sure to write "1" into IL2 and IL3.

Note 2: In main program, before manipulating the interrupt enable flag (EF) or the interrupt latch (IL), be sure to clear IMF to "0" (Disable interrupt by DI instruction). Then set IMF newly again as required after operating on the EF or IL (Enable interrupt by EI instruction)
In interrupt service routine, because the IMF becomes "0" automatically, clearing IMF need not execute normally on interrupt service routine. However, if using multiple interrupt on interrupt service routine, manipulating EF or IL should be executed before setting IMF="1".

Note 3: Do not clear IL with read-modify-write instructions such as bit operations.

Interrupt Enable Registers

(Initial value: 00000000 0000***0)

EIRH,EIRL (003BH, 003AH)	15	14	13	12	11	10	9	8	7	6	5	4	3	2	1	0
	EF15	EF14	EF13	EF12	EF11	EF10	EF9	EF8	EF7	EF6	EF5	EF4				IMF
	EIRH (003BH)								EIRL (003AH)							

EF15 to EF4	Individual-interrupt enable flag (Specified for each bit)	0: Disables the acceptance of each maskable interrupt. 1: Enables the acceptance of each maskable interrupt.	R/W
IMF	Interrupt master enable flag	0: Disables the acceptance of all maskable interrupts 1: Enables the acceptance of all maskable interrupts	

Note 1: *: Don’t care

Note 2: Do not set IMF and the interrupt enable flag (EF15 to EF4) to “1” at the same time.

Note 3: In main program, before manipulating the interrupt enable flag (EF) or the interrupt latch (IL), be sure to clear IMF to "0" (Disable interrupt by DI instruction). Then set IMF newly again as required after operating on the EF or IL (Enable interrupt by EI instruction)
In interrupt service routine, because the IMF becomes "0" automatically, clearing IMF need not execute normally on interrupt service routine. However, if using multiple interrupt on interrupt service routine, manipulating EF or IL should be executed before setting IMF="1".

Not Recommended for New Design

3.3 Interrupt Source Selector (INTSEL)

Each interrupt source that shares the interrupt source level with another interrupt source is allowed to enable the interrupt latch only when it is selected in the INTSEL register. The interrupt controller does not hold interrupt requests corresponding to interrupt sources that are not selected in the INTSEL register. Therefore, the INTSEL register must be set appropriately before interrupt requests are generated.

The following interrupt sources share their interrupt source level; the source is selected onnthe register INTSEL.

1. INT4 and INTTXD share the interrupt source level whose priority is 15.
2. $\overline{\text{INT5}}$ and INTADC share the interrupt source level whose priority is 16.

Interrupt source selector

INTSEL (003EH)	7	6	5	4	3	2	1	0	
	-	-	-	-	-	-	IL14ER	IL15ER	(Initial value: **** **00)

IL14ER	Selects INT4 or INTTXD	0: INT4 1: INTTXD	R/W
IL15ER	Selects $\overline{\text{INT5}}$ or INTADC	0: $\overline{\text{INT5}}$ 1: INTADC	R/W

3.4 Interrupt Sequence

An interrupt request, which raised interrupt latch, is held, until interrupt is accepted or interrupt latch is cleared to “0” by resetting or an instruction. Interrupt acceptance sequence requires 8 machine cycles (2 μs @16 MHz) after the completion of the current instruction. The interrupt service task terminates upon execution of an interrupt return instruction [RETI] (for maskable interrupts) or [RETN] (for non-maskable interrupts). Figure 3-1 shows the timing chart of interrupt acceptance processing.

3.4.1 Interrupt acceptance processing is packaged as follows.

a. The interrupt master enable flag (IMF) is cleared to “0” in order to disable the acceptance of any following interrupt.
b. The interrupt latch (IL) for the interrupt source accepted is cleared to “0”.
c. The contents of the program counter (PC) and the program status word, including the interrupt master enable flag (IMF), are saved (Pushed) on the stack in sequence of PSW + IMF, PCH, PCL. Meanwhile, the stack pointer (SP) is decremented by 3.
d. The entry address (Interrupt vector) of the corresponding interrupt service program, loaded on the vector table, is transferred to the program counter.
e. The instruction stored at the entry address of the interrupt service program is executed.

Note: When the contents of PSW are saved on the stack, the contents of IMF are also saved.

Not Recommended for New Design

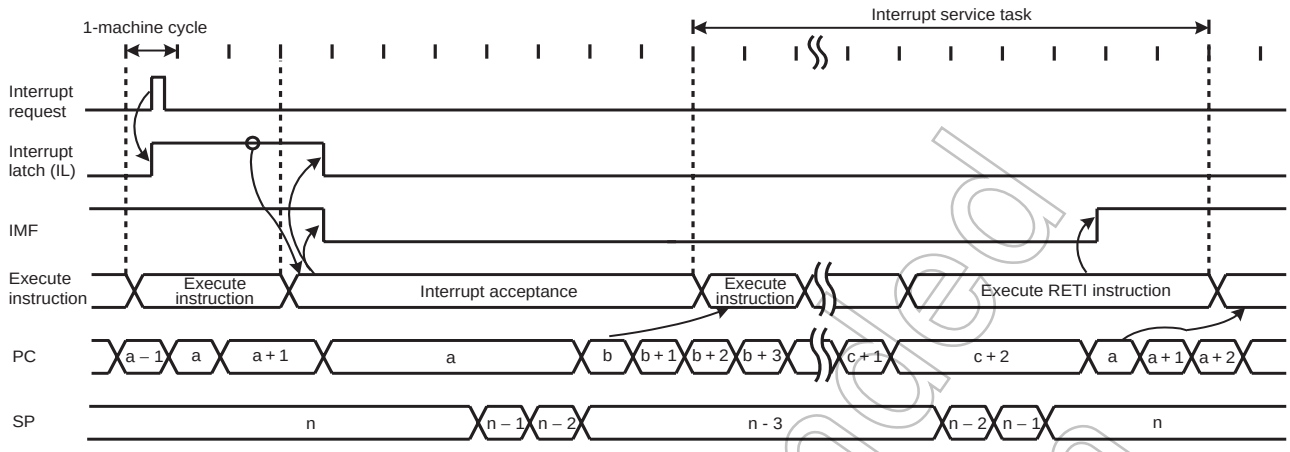

Note 1: a: Return address entry address, b: Entry address, c: Address which RETI instruction is stored

Note 2: On condition that interrupt is enabled, it takes 38/fc [s] or 38/fs [s] at maximum (If the interrupt latch is set at the first machine cycle on 10 cycle instruction) to start interrupt acceptance processing since its interrupt latch is set.

Figure 3-1 Timing Chart of Interrupt Acceptance/Return Interrupt Instruction

Example: Correspondence between vector table address for INTTBT and the entry address of the interrupt service program

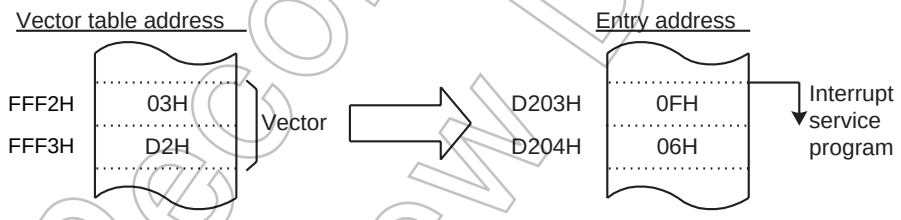

Figure 3-2 Vector table address,Entry address

A maskable interrupt is not accepted until the IMF is set to “1” even if the maskable interrupt higher than the level of current servicing interrupt is requested.

In order to utilize nested interrupt service, the IMF is set to “1” in the interrupt service program. In this case, acceptable interrupt sources are selectively enabled by the individual interrupt enable flags.

To avoid overloaded nesting, clear the individual interrupt enable flag whose interrupt is currently serviced, before setting IMF to “1”. As for non-maskable interrupt, keep interrupt service shorten compared with length between interrupt requests; otherwise the status cannot be recovered as non-maskable interrupt would simply nested.

3.4.2 Saving/restoring general-purpose registers

During interrupt acceptance processing, the program counter (PC) and the program status word (PSW, includes IMF) are automatically saved on the stack, but the accumulator and others are not. These registers are saved by software if necessary. When multiple interrupt services are nested, it is also necessary to avoid using the same data memory area for saving registers. The following methods are used to save/restore the general-purpose registers.

Not Recommended for New Design

3.4.2.1 Using PUSH and POP instructions

If only a specific register is saved or interrupts of the same source are nested, general-purpose registers can be saved/restored using the PUSH/POP instructions.

Example :Save/store register using PUSH and POP instructions

```
PINTxx:   PUSH   WA          ; Save WA register
          (interrupt processing)
          POP    WA          ; Restore WA register
          RETI               ; RETURN
```

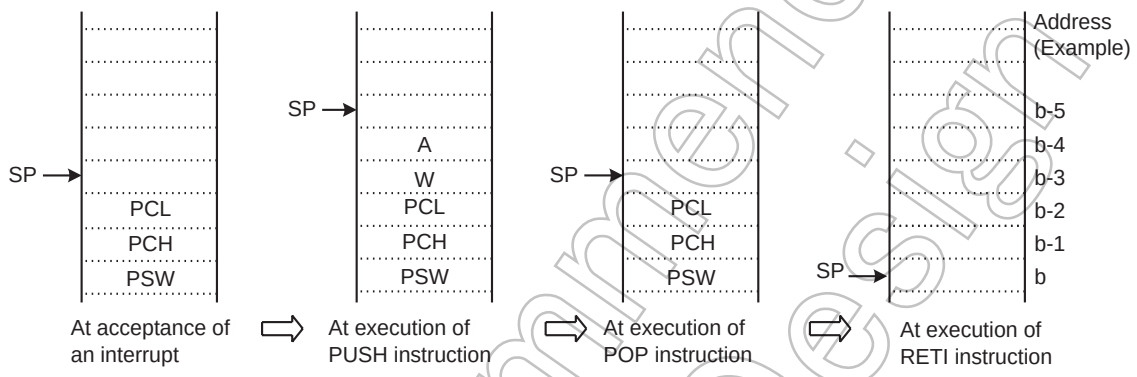

Figure 3-3 Save/store register using PUSH and POP instructions

3.4.2.2 Using data transfer instructions

To save only a specific register without nested interrupts, data transfer instructions are available.

Example :Save/store register using data transfer instructions

```
PINTxx:   LD     (GSAVA), A   ; Save A register
          (interrupt processing)
          LD     A, (GSAVA)   ; Restore A register
          RETI                ; RETURN
```

Not Recommended for New Design

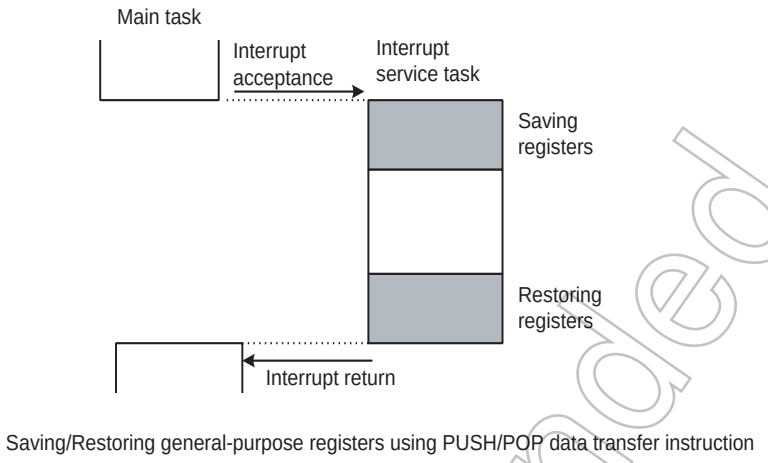

Figure 3-4 Saving/Restoring General-purpose Registers under Interrupt Processing

3.4.3 Interrupt return

Interrupt return instructions [RETI]/[RETN] perform as follows.

[RETI]/[RETN] Interrupt Return
1. Program counter (PC) and program status word (PSW, includes IMF) are restored from the stack. 2. Stack pointer (SP) is incremented by 3.

As for address trap interrupt (INTATRAP), it is required to alter stacked data for program counter (PC) to restarting address, during interrupt service program.

Note: If [RETN] is executed with the above data unaltered, the program returns to the address trap area and INTATRAP occurs again.When interrupt acceptance processing has completed, stacked data for PCL and PCH are located on address (SP + 1) and (SP + 2) respectively.

Example 1 :Returning from address trap interrupt (INTATRAP) service program

```
PINTxx:   POP     WA                ; Recover SP by 2
          LD      WA, Return Address ;
          PUSH    WA                ; Alter stacked data
          (interrupt processing)
          RETN                      ; RETURN
```

Example 2 :Restarting without returning interrupt
(In this case, PSW (Includes IMF) before interrupt acceptance is discarded.)

```
PINTxx:   INC     SP                ; Recover SP by 3
          INC     SP                ;
          INC     SP                ;
          (interrupt processing)
          LD      EIRL, data        ; Set IMF to "1" or clear it to "0"
          JP      Restart Address   ; Jump into restarting address
```

Interrupt requests are sampled during the final cycle of the instruction being executed. Thus, the next interrupt can be accepted immediately after the interrupt return instruction is executed.

Not Recommended for New Design

Note 1: It is recommended that stack pointer be return to rate before INTATRAP (Increment 3 times), if return interrupt instruction [RETN] is not utilized during interrupt service program under INTATRAP (such as Example 2).

Note 2: When the interrupt processing time is longer than the interrupt request generation time, the interrupt service task is performed but not the main task.

3.5 Software Interrupt (INTSW)

Executing the SWI instruction generates a software interrupt and immediately starts interrupt processing (INTSW is highest prioritized interrupt).

Use the SWI instruction only for detection of the address error or for debugging.

3.5.1 Address error detection

FFH is read if for some cause such as noise the CPU attempts to fetch an instruction from a non-existent memory address during single chip mode. Code FFH is the SWI instruction, so a software interrupt is generated and an address error is detected. The address error detection range can be further expanded by writing FFH to unused areas of the program memory. Address trap reset is generated in case that an instruction is fetched from RAM or SFR areas.

3.5.2 Debugging

Debugging efficiency can be increased by placing the SWI instruction at the software break point setting address.

3.6 Undefined Instruction Interrupt (INTUNDEF)

Taking code which is not defined as authorized instruction for instruction causes INTUNDEF. INTUNDEF is generated when the CPU fetches such a code and tries to execute it. INTUNDEF is accepted even if non-maskable interrupt is in process. Contemporary process is broken and INTUNDEF interrupt process starts, soon after it is requested.

Note: The undefined instruction interrupt (INTUNDEF) forces CPU to jump into vector address, as software interrupt (SWI) does.

3.7 Address Trap Interrupt (INTATRAP)

Fetching instruction from unauthorized area for instructions (Address trapped area) causes reset output or address trap interrupt (INTATRAP). INTATRAP is accepted even if non-maskable interrupt is in process. Contemporary process is broken and INTATRAP interrupt process starts, soon after it is requested.

Note: The operating mode under address trapped, whether to be reset output or interrupt processing, is selected on watchdog timer control register (WDTCR).

3.8 External Interrupts

The TMP86PM46NG has 6 external interrupt inputs. These inputs are equipped with digital noise reject circuits (Pulse inputs of less than a certain time are eliminated as noise).

Edge selection is also possible with INT1 to INT4. The $\overline{\text{INT0}}$/P00 pin can be configured as either an external interrupt input pin or an input/output port, and is configured as an input port during reset.

Edge selection, noise reject control and $\overline{\text{INT0}}$/P00 pin function selection are performed by the external interrupt control register (EINTCR).

Not Recommended for New Design

Source	Pin	Enable Conditions	Release Edge (level)	Digital Noise Reject
INT0	$\overline{\text{INT0}}$	IMF • EF4 • INT0EN=1	Falling edge	Pulses of less than 2/fc [s] are eliminated as noise. Pulses of 7/fc [s] or more are considered to be signals. In the SLOW or the SLEEP mode, pulses of less than 1/fs [s] are eliminated as noise. Pulses of 3.5/fs [s] or more are considered to be signals.
INT1	INT1	IMF • EF5 = 1	Falling edge or Rising edge	Pulses of less than 15/fc or 63/fc [s] are eliminated as noise. Pulses of 49/fc or 193/fc [s] or more are considered to be signals. In the SLOW or the SLEEP mode, pulses of less than 1/fs [s] are eliminated as noise. Pulses of 3.5/fs [s] or more are considered to be signals.
INT2	INT2	IMF • EF8 = 1	Falling edge or Rising edge	Pulses of less than 7/fc [s] are eliminated as noise. Pulses of 25/fc [s] or more are considered to be signals. In the SLOW or the SLEEP mode, pulses of less than 1/fs [s] are eliminated as noise. Pulses of 3.5/fs [s] or more are considered to be signals.
INT3	INT3	IMF • EF11 = 1	Falling edge or Rising edge	Pulses of less than 7/fc [s] are eliminated as noise. Pulses of 25/fc [s] or more are considered to be signals. In the SLOW or the SLEEP mode, pulses of less than 1/fs [s] are eliminated as noise. Pulses of 3.5/fs [s] or more are considered to be signals.
INT4	INT4	IMF • EF14 = 1 and IL14ER=0	Falling edge, Rising edge, Falling and Rising edge or H level	Pulses of less than 7/fc [s] are eliminated as noise. Pulses of 25/fc [s] or more are considered to be signals. In the SLOW or the SLEEP mode, pulses of less than 1/fs [s] are eliminated as noise. Pulses of 3.5/fs [s] or more are considered to be signals.
INT5	$\overline{\text{INT5}}$	IMF • EF15 = 1 and IL15ER=0	Falling edge	Pulses of less than 2/fc [s] are eliminated as noise. Pulses of 7/fc [s] or more are considered to be signals. In the SLOW or the SLEEP mode, pulses of less than 1/fs [s] are eliminated as noise. Pulses of 3.5/fs [s] or more are considered to be signals.

Note 1: In NORMAL1/2 or IDLE1/2 mode, if a signal with no noise is input on an external interrupt pin, it takes a maximum of "signal establishment time + 6/fs[s]" from the input signal's edge to set the interrupt latch.

Note 2: When INT0EN = "0", IL4 is not set even if a falling edge is detected on the $\overline{\text{INT0}}$ pin input.

Note 3: When a pin with more than one function is used as an output and a change occurs in data or input/output status, an interrupt request signal is generated in a pseudo manner. In this case, it is necessary to perform appropriate processing such as disabling the interrupt enable flag.

Not Recommended for New Design

External Interrupt Control Register

EINTCR	7	6	5	4	3	2	1	0	
(0037H)	INT1NC	INT0EN	INT4ES		INT3ES	INT2ES	INT1ES		(Initial value: 0000 000*)

INT1NC	Noise reject time select	0: Pulses of less than 63/fc [s] are eliminated as noise 1: Pulses of less than 15/fc [s] are eliminated as noise	R/W
INT0EN	P00/$\overline{\text{INT0}}$ pin configuration	0: P00 input/output port 1: $\overline{\text{INT0}}$ pin (Port P00 should be set to an input mode)	R/W
INT4 ES	INT4 edge select	00: Rising edge 01: Falling edge 10: Rising edge and Falling edge 11: H level	R/W
INT3 ES	INT3 edge select	0: Rising edge 1: Falling edge	R/W
INT2 ES	INT2 edge select	0: Rising edge 1: Falling edge	R/W
INT1 ES	INT1 edge select	0: Rising edge 1: Falling edge	R/W

Note 1: fc: High-frequency clock [Hz], *: Don't care

Note 2: When the system clock frequency is switched between high and low or when the external interrupt control register (EINTCR) is overwritten, the noise canceller may not operate normally. It is recommended that external interrupts are disabled using the interrupt enable register (EIR).

Note 3: The maximum time from modifying INT1NC until a noise reject time is changed is 2^6/fc.

Note 4: In case $\overline{\text{RESET}}$ pin is released while the state of INT4 pin keeps "H" level, the external interrupt 4 request is not generated even if the INT4 edge select is specified as "H" level. The rising edge is needed after $\overline{\text{RESET}}$ pin is released.

Not Recommended for New Design

Not Recommended for New Design

4. Special Function Register (SFR)

The TMP86PM46NG adopts the memory mapped I/O system, and all peripheral control and data transfers are performed through the special function register (SFR). The SFR is mapped on address 0000H to 003FH.

This chapter shows the arrangement of the special function register (SFR) for TMP86PM46NG.

4.1 SFR

Address	Read	Write
0000H	P0DR	
0001H	P1DR	
0002H	P2DR	
0003H	P3DR	
0004H	P4DR	
0005H	Reserved	
0006H	Reserved	
0007H	Reserved	
0008H	P0PRD	-
0009H	Reserved	
000AH	P2PRD	-
000BH	Reserved	
000CH	Reserved	
000DH	P1CR	
000EH	P3CR	
000FH	P4CR	
0010H	TC1DRAL	
0011H	TC1DRAH	
0012H	TC1DRBL	
0013H	TC1DRBH	
0014H	TC1CR	
0015H	Reserved	
0016H	TC3CR	
0017H	TC4CR	
0018H	TTREG3	
0019H	TTREG4	
001AH	PWREG3	
001BH	PWREG4	
001CH	ADCCR1	
001DH	ADCCR2	
001EH	ADCDR2	-
001FH	ADCDR1	-
0020H	UARTSR	UARTCR1
0021H	-	UARTCR2
0022H	RDBUF	TDBUF
0023H	Reserved	
0024H	Reserved	
0025H	Reserved	
0026H	SIOCR1	
0027H	SIOSR	

Not Recommended for New Design

Address	Read	Write
0028H	SIORDB	SIOTDB
0029H	Reserved	
002AH	Reserved	
002BH	Reserved	
002CH	Reserved	
002DH	Reserved	
002EH	Reserved	
002FH	Reserved	
0030H	Reserved	
0031H	-	STOPCR
0032H	Reserved	
0033H	Reserved	
0034H	-	WDTCR1
0035H	-	WDTCR2
0036H	TBTCR	
0037H	EINTCR	
0038H	SYSCR1	
0039H	SYSCR2	
003AH	EIRL	
003BH	EIRH	
003CH	ILL	
003DH	ILH	
003EH	INTSEL	
003FH	PSW	

Note 1: Do not access reserved areas by the program.

Note 2: – ; Cannot be accessed.

Note 3: Write-only registers and interrupt latches cannot use the read-modify-write instructions (Bit manipulation instructions such as SET, CLR, etc. and logical operation instructions such as AND, OR, etc.).

Not Recommended for New Design

5. I/O Ports

The TMP86PM46NG have 5 parallel input/output ports (33 pins) as follows.

	Primary Function	Secondary Functions
Port P0	8-bit I/O port	External interrupt input, serial and timer/counter input/output.
Port P1	6-bit I/O port	External interrupt input, and timer/counter input/output.
Port P2	3-bit I/O port	Low-frequency resonator connections, external interrupt input, and STOP mode release signal input.
Port P3	8-bit I/O port	Analog input, and STOP mode release signal input.
Port P4	8-bit I/O port	

Each output port contains a latch, which holds the output data. All input ports do not have latches, so the external input data should be externally held until the input data is read from outside or reading should be performed several timer before processing. Figure 5-1 shows input/output timing examples.

External data is read from an I/O port in the S1 state of the read cycle during execution of the read instruction. This timing cannot be recognized from outside, so that transient input such as chattering must be processed by the program.

Output data changes in the S2 state of the write cycle during execution of the instruction which writes to an I/O port.

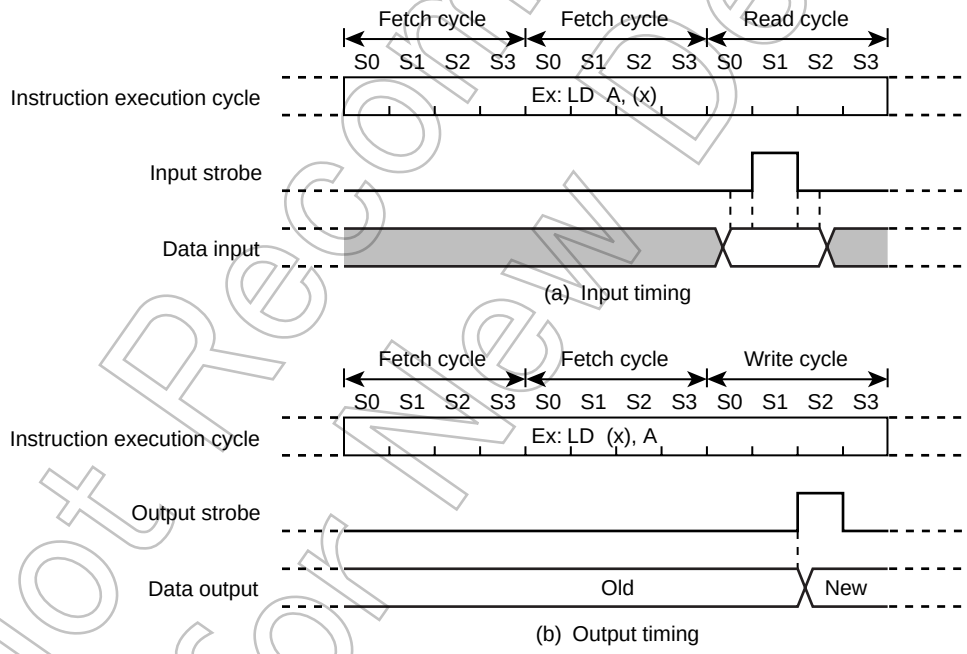

Note: The positions of the read and write cycles may vary, depending on the instruction.

Figure 5-1 Input/Output Timing (Example)

Not Recommended for New Design

5.1 Port P0 (P07 to P00)

Port P0 is an 8-bit input/output port which is also used as an external interrupt input, serial interface input/output and timer/counter input/output.

When used as an input port or a secondary function pins, the respective output latch (P0DR) should be set to “1”. When used as an output port, the respective P0DR bit should be set to “0”. During reset, the output latch is initialized to “1”.

P0 port output latch (P0DR) and P0 port terminal input (P0PRD) are located on their respective address.

When read the output latch data, the P0DR should be read and when read the terminal input data, the P0PRD register should be read.

P00 port ($\overline{INT0}$) can be configured as either an I/O port or as external interrupt input with INT0EN (bit in EINTCR). During reset, P00 port ($\overline{INT0}$) is configured as an input port.

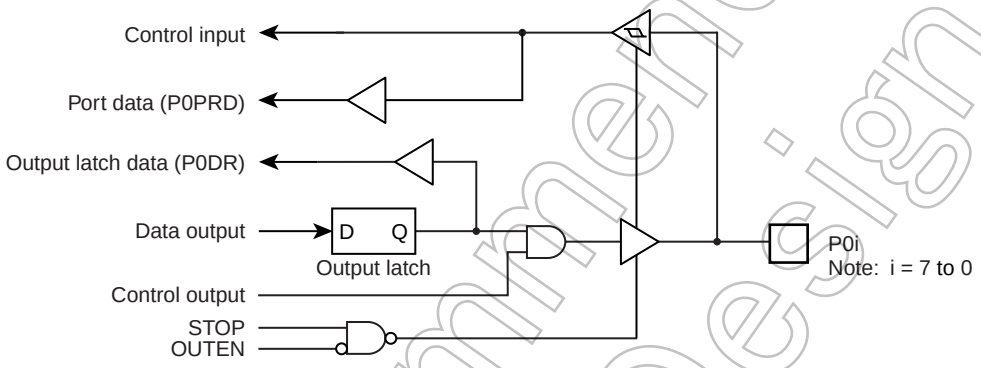

Figure 5-2 Port 0

P0DR (0000H) R/W

7	6	5	4	3	2	1	0
P07 INT4	P06 $\overline{SCK}$	P05 SI	P04 SO	P03 TXD	P02 RXD	P01 $\overline{PWM4}$ TC4 $\overline{PDO4}$ $\overline{PPG4}$	P00 $\overline{INT0}$

(Initial value: 1111 1111)

P0PRD (0008H) Read only

7	6	5	4	3	2	1	0
P07	P06	P05	P04	P03	P02	P01	P00

Not Recommended for New Design

5.2 Port P1 (P15 to P10)

Port P1 is an 6-bit input/output port which can be configured as an input or an output in one-bit unit under software control. Input/output mode is specified by the corresponding bit in the port P1 input/output control register (P1CR). Port P1 is configured as an input if its corresponding P1CR bit is cleared to “0”, and as an output if its corresponding P1CR bit is set to “1”.

During reset, the P1CR is initialized to “0” and port P1 is input mode. The P1 output latches are also initialized to “0”.

Port P1 is also used as an external interrupt input, a timer/counter input/output, and a divider output. When used as an input port, an external interrupt input or a timer/counter input, the corresponding bit of P1CR is cleared to “0”.

When used as an output port, a timer/counter output or divider output, the corresponding bit of P1CR is set to “1” and beforehand the corresponding output latch should be set to “1”. Data can be written into the output latch regardless of P1CR contents, therefore initial output data should be written into the output latch before setting P1CR.

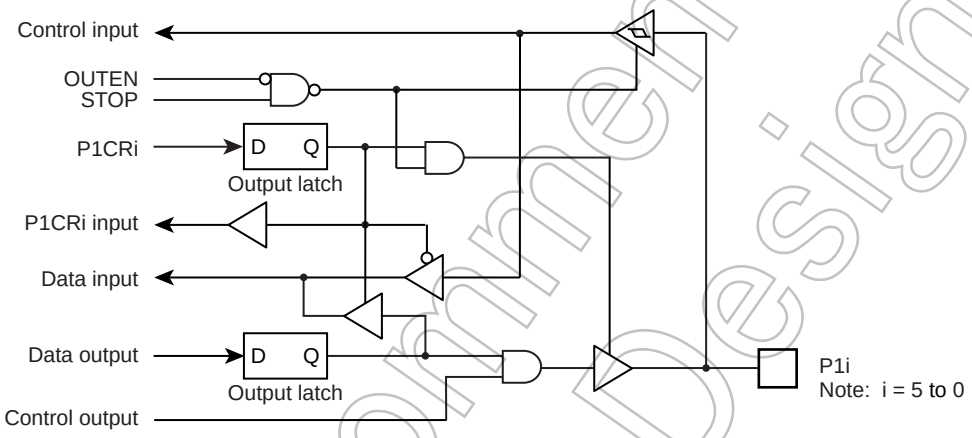

Figure 5-3 Port P1

	7	6	5	4	3	2	1	0	
P1DR (0001H) R/W			P15 INT3	P14 $\overline{\text{PPG}}$	P13 $\overline{\text{DVO}}$	P12 INT2 TC1	P11 INT1	P10 $\overline{\text{PWM3}}$ TC3 $\overline{\text{PDO3}}$	(Initial value: **00 0000)

	7	6	5	4	3	2	1	0	
P1CR (000DH)									(Initial value: **00 0000)

P1CR	I/O port for P1 port (specified for each bit)	0: Input mode 1: Output mode	R/W

Note 1: Bit 7 and 6 in P1DR and P1CR are always read as undefined value.

Note 2: Please set the bit 7 and 6 of P1CR to “1” in an emulator.

Note 3: Ports set to the input mode read the pin states. Ports set to the output mode read the output latch. When input pin and output pin exist in port P1 together, the contents of the output latch which is specified as an input mode may be rewritten by executing the bit manipulation instructions.

Not Recommended for New Design

5.3 Port P2 (P22 to P20)

Port P2 is a 3-bit input/output port.

It is also used as an external interrupt, a STOP mode release signal input, and low-frequency crystal oscillator connection pins. When used as an input port or a secondary function pins, respective output latch (P2DR) should be set to “1”.

During reset, the P2DR is initialized to “1”.

A low-frequency crystal oscillator (32.768 kHz) is connected to pins P21 (XTIN) and P22 (XTOUT) in the dual-clock mode. In the single-clock mode, pins P21 and P22 can be used as normal input/output ports.

It is recommended that pin P20 should be used as an external interrupt input, a STOP mode release signal input, or an input port. If it is used as an output port, the interrupt latch is set on the falling edge of the output pulse.

P2 port output latch (P2DR) and P2 port terminal input (P2PRD) are located on their respective address.

When read the output latch data, the P2DR should be read and when read the terminal input data, the P2PRD register should be read. If a read instruction is executed for port P2, read data of bits 7 to 3 are unstable.

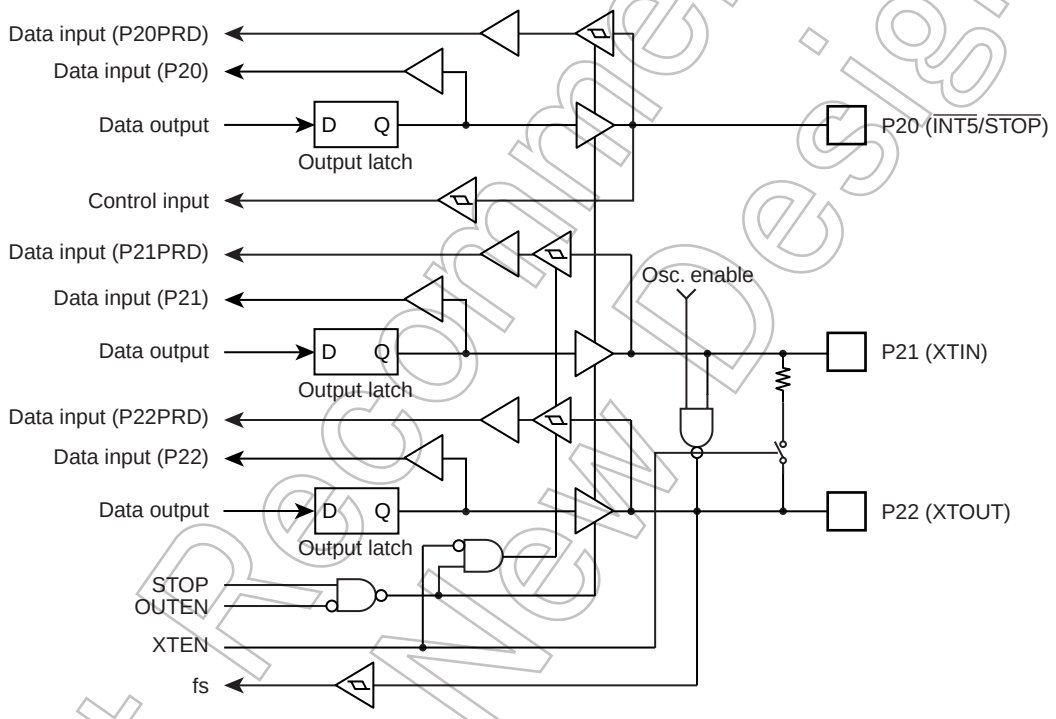

Figure 5-4 Port 2

	7	6	5	4	3	2	1	0	
P2DR (0002H) R/W						P22 XTOUT	P21 XTIN	P20 INT5 STOP	(Initial value: **** *111)

	7	6	5	4	3	2	1	0
P2PRD (000AH) Read only						P22	P21	P20

Not Recommended for New Design

5.4 Port P3 (P37 to P30)

Port P3 is an 8-bit input/output port which can be configured as an input or an output in one-bit unit under software control. Port P3 is also used as an analog input, key on wake up input. Input/output mode is specified by the corresponding bit in the port P3 input/output control register (P3CR), and ADCCR1<AINDS>. During reset, P3CR are initialized to “0” and ADCCR1<AINDS> is set to “1”, therefore port P3 is configured as an input.

When used as an analog input, set an analog input channel to ADCCR1<SAIN> and clear ADCCR1<AINDS> to “0”. When ADCCR1<AINDS> is “0”, the pin which is specified as an analog input is used as analog input independent on the value of P3CR and P3DR.

When used as an input port or key on wake up input, the corresponding bit of P3CR is cleared to “0” without specifying as an analog input.

When the AD converter is enabled (ADCCR1<AINDS> is “0”), the data of port which is selected as an analog input is read “0”. and the data of port which is not selected as an analog input is read “0” or “1”, depend on the voltage level.

When used as an output port, the corresponding bit of P3CR is set to “1” without specifying as an analog input. Data can be written into the output latch regardless of P3CR contents, therefore initial output data should be written into the output latch before setting P3CR.

The pins not used as analog input can be used as an input/output port. But output instructions should not be executed to keep a precision. In addition, a variable signal should not be input to an adjacent port to the analog input during AD conversion.

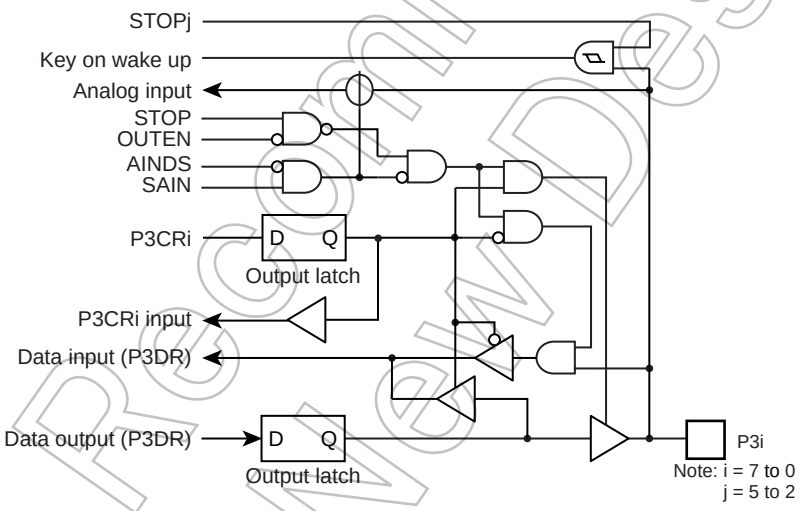

Figure 5-5 Port P3

	7	6	5	4	3	2	1	0	
P3DR (0003H) R/W	P37 AIN7 STOP5	P36 AIN6 STOP4	P35 AIN5 STOP3	P34 AIN4 STOP2	P33 AIN3	P32 AIN2	P31 AIN1	P30 AIN0	(Initial value: 0000 0000)

	7	6	5	4	3	2	1	0	
P3CR (000EH)									(Initial value: 0000 0000)

P3CR	I/O control (Specified for each bit)	0: Input mode 1: Output mode	R/W

Note: Ports set to the input mode read the pin states. Ports set to the output mode read the output latch. When input pin and output pin exist in port P3 together, the contents of the output latch which is specified as an input mode may be rewritten by executing the bit manipulation instructions.

Not Recommended for New Design

5.5 Port P4 (P47 to P40)

Port P4 is an 8-bit input/output port which can be configured as an input or an output in one-bit unit under software control. Input/output mode is specified by the corresponding bit in the port P4 input/output control register (P4CR). Port P4 is configured as an input if its corresponding P4CR bit is cleared to “0”, and as an output if its corresponding P4CR bit is set to “1”.

During reset, the P4CR is initialized to “0” and port P4 is input mode. The P4 output latches are also initialized to “0”.

When used as an input port, the corresponding bit of P4CR is cleared to “0”.

When used as an output port, the corresponding bit of P4CR is set to “1”. Data can be written into the output latch regardless of P4CR contents, therefore initial output data should be written into the output latch before setting P4CR.

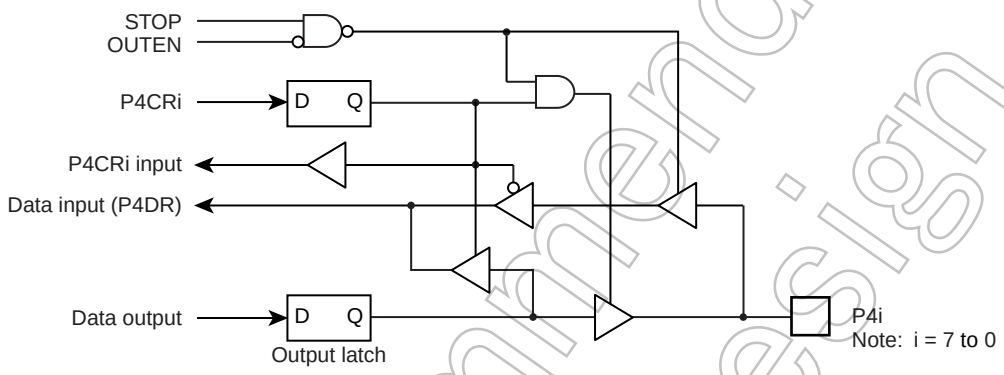

Figure 5-6 Port P4

	7	6	5	4	3	2	1	0	
P4DR (0004H) R/W	P47	P46	P45	P44	P43	P42	P41	P40	(Initial value: 0000 0000)

	7	6	5	4	3	2	1	0	
P4CR (000FH)									(Initial value: 0000 0000)

P4CR	I/O control for port P4 (Specified for each bit)	0: Input mode 1: Output mode	R/W

Note: Ports set to the input mode read the pin states. Ports set to the output mode read the output latch. When input pin and output pin exist in port P4 together, the contents of the output latch which is specified as an input mode may be rewritten by executing the bit manipulation instructions.

Not Recommended for New Design

6. Time Base Timer (TBT)

The time base timer generates time base for key scanning, dynamic displaying, etc. It also provides a time base timer interrupt (INTTBT).

6.1 Time Base Timer

6.1.1 Configuration

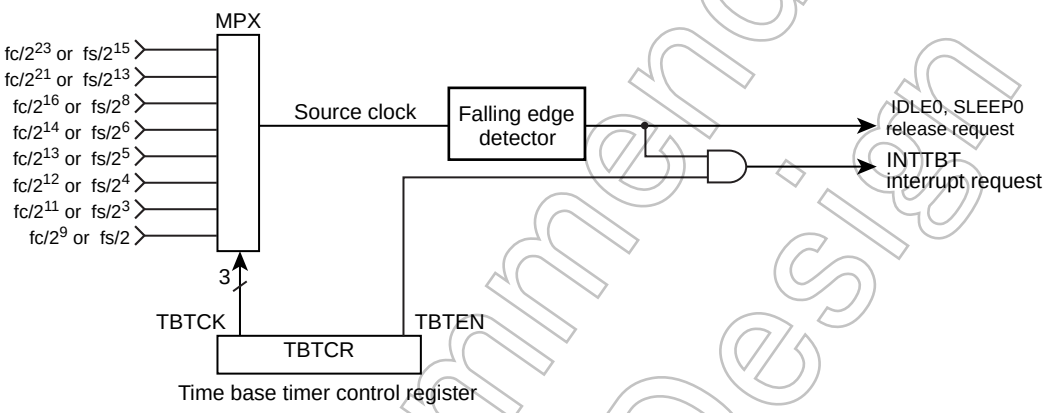

Figure 6-1 Time Base Timer configuration

6.1.2 Control

Time Base Timer is controled by Time Base Timer control register (TBTCR).

Time Base Timer Control Register

	7	6	5	4	3	2	1	0	
TBTCR (0036H)	(DVOEN)	(DVOCK)		(DV7CK)	TBTEN	TBTCK			(Initial Value: 0000 0000)

TBTEN	Time Base Timer enable / disable	0: Disable 1: Enable				
TBTCK	Time Base Timer interrupt Frequency select : [Hz]		NORMAL1/2, IDLE1/2 Mode		SLOW1/2 SLEEP1/2 Mode	R/W
			DV7CK = 0	DV7CK = 1		
		000	fc/2^23	fs/2^15	fs/2^15	
		001	fc/2^21	fs/2^13	fs/2^13	
		010	fc/2^16	fs/2^8	–	
		011	fc/2^14	fs/2^6	–	
		100	fc/2^13	fs/2^5	–	
		101	fc/2^12	fs/2^4	–	
		110	fc/2^11	fs/2^3	–	
		111	fc/2^9	fs/2	–	

Note 1: fc; High-frequency clock [Hz], fs; Low-frequency clock [Hz], *; Don't care

Not Recommended for New Design

Note 2: The interrupt frequency (TBTCK) must be selected with the time base timer disabled (TBTEN="0"). (The interrupt frequency must not be changed with the disable from the enable state.) Both frequency selection and enabling can be performed simultaneously.

Example :Set the time base timer frequency to fc/2^{16} [Hz] and enable an INTTBT interrupt.

```
LD      (TBTCR) ,  00000010B      ; TBTCK ← 010
LD      (TBTCR) ,  00001010B      ; TBTEN ← 1
DI                                ; IMF ← 0
SET     (EIRL) . 6
```

Table 6-1 Time Base Timer Interrupt Frequency (Example : fc = 16.0 MHz, fs = 32.768 kHz)

TBTCK	Time Base Timer Interrupt Frequency [Hz]		
	NORMAL1/2, IDLE1/2 Mode	NORMAL1/2, IDLE1/2 Mode	SLOW1/2, SLEEP1/2 Mode
	DV7CK = 0	DV7CK = 1	
000	1.91	1	1
001	7.63	4	4
010	244.14	128	–
011	976.56	512	–
100	1953.13	1024	–
101	3906.25	2048	–
110	7812.5	4096	–
111	31250	16384	–

6.1.3 Function

An INTTBT (Time Base Timer Interrupt) is generated on the first falling edge of source clock (The divider output of the timing generato which is selected by TBTCK.) after time base timer has been enabled.

The divider is not cleared by the program; therefore, only the first interrupt may be generated ahead of the set interrupt period (Figure 6-2).

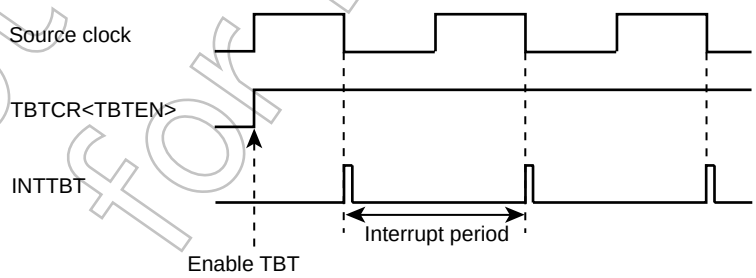

Figure 6-2 Time Base Timer Interrupt

Not Recommended for New Design

6.2 Divider Output ($\overline{DVO}$)

Approximately 50% duty pulse can be output using the divider output circuit, which is useful for piezoelectric buzzer drive. Divider output is from $\overline{DVO}$ pin.

6.2.1 Configuration

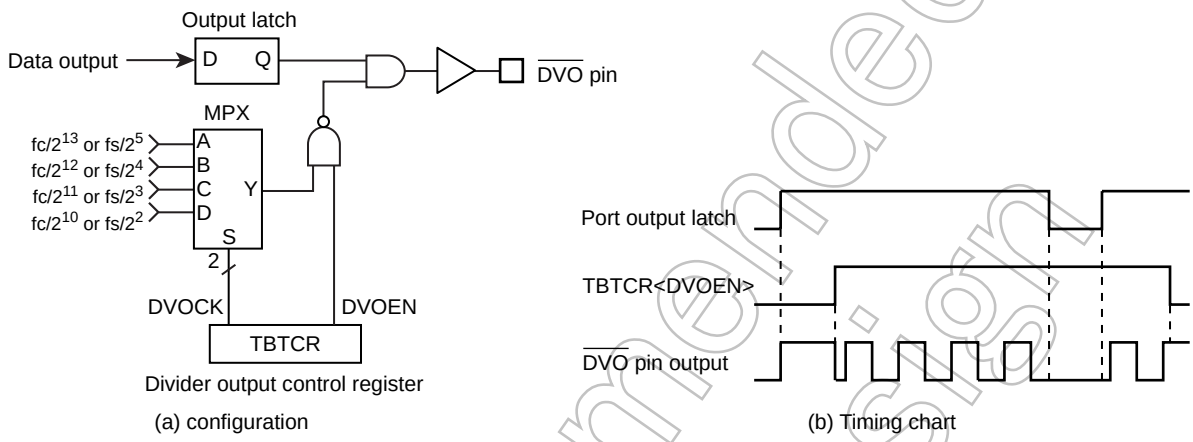

Figure 6-3 Divider Output

6.2.2 Control

The Divider Output is controlled by the Time Base Timer Control Register.

Time Base Timer Control Register

TBTCR (0036H)	7	6	5	4	3	2	1	0	
	DVOEN	DVOCK		(DV7CK)	(TBTEN)	(TBTCK)			(Initial value: 0000 0000)

DVOEN	Divider output enable / disable	0: Disable 1: Enable				R/W
DVOCK	Divider Output ($\overline{DVO}$) frequency selection: [Hz]		NORMAL1/2, IDLE1/2 Mode		SLOW1/2 SLEEP1/2 Mode	R/W
			DV7CK = 0	DV7CK = 1		
		00	$fc/2^{13}$	$fs/2^5$	$fs/2^5$	
		01	$fc/2^{12}$	$fs/2^4$	$fs/2^4$	
		10	$fc/2^{11}$	$fs/2^3$	$fs/2^3$	
		11	$fc/2^{10}$	$fs/2^2$	$fs/2^2$	

Note: Selection of divider output frequency (DVOCK) must be made while divider output is disabled (DVOEN="0"). Also, in other words, when changing the state of the divider output frequency from enabled (DVOEN="1") to disable(DVOEN="0"), do not change the setting of the divider output frequency.

Not Recommended for New Design

Example :1.95 kHz pulse output (fc = 16.0 MHz)

```
LD      (TBTCR) ,  00000000B        ; DVOCK ← "00"
LD      (TBTCR) ,  10000000B        ; DVOEN ← "1"
```

Table 6-2 Divider Output Frequency (Example : fc = 16.0 MHz, fs = 32.768 kHz)

DVOCK	Divider Output Frequency [Hz]		
	NORMAL1/2, IDLE1/2 Mode		SLOW1/2, SLEEP1/2 Mode
	DV7CK = 0	DV7CK = 1	
00	1.953 k	1.024 k	1.024 k
01	3.906 k	2.048 k	2.048 k
10	7.813 k	4.096 k	4.096 k
11	15.625 k	8.192 k	8.192 k

Not Recommended for New Design

7. Watchdog Timer (WDT)

The watchdog timer is a fail-safe system to detect rapidly the CPU malfunctions such as endless loops due to spurious noises or the deadlock conditions, and return the CPU to a system recovery routine.

The watchdog timer signal for detecting malfunctions can be programmed only once as “reset request” or “interrupt request”. Upon the reset release, this signal is initialized to “reset request”.

When the watchdog timer is not used to detect malfunctions, it can be used as the timer to provide a periodic interrupt.

Note: Care must be taken in system design since the watchdog timer functions are not be operated completely due to effect of disturbing noise.

7.1 Watchdog Timer Configuration

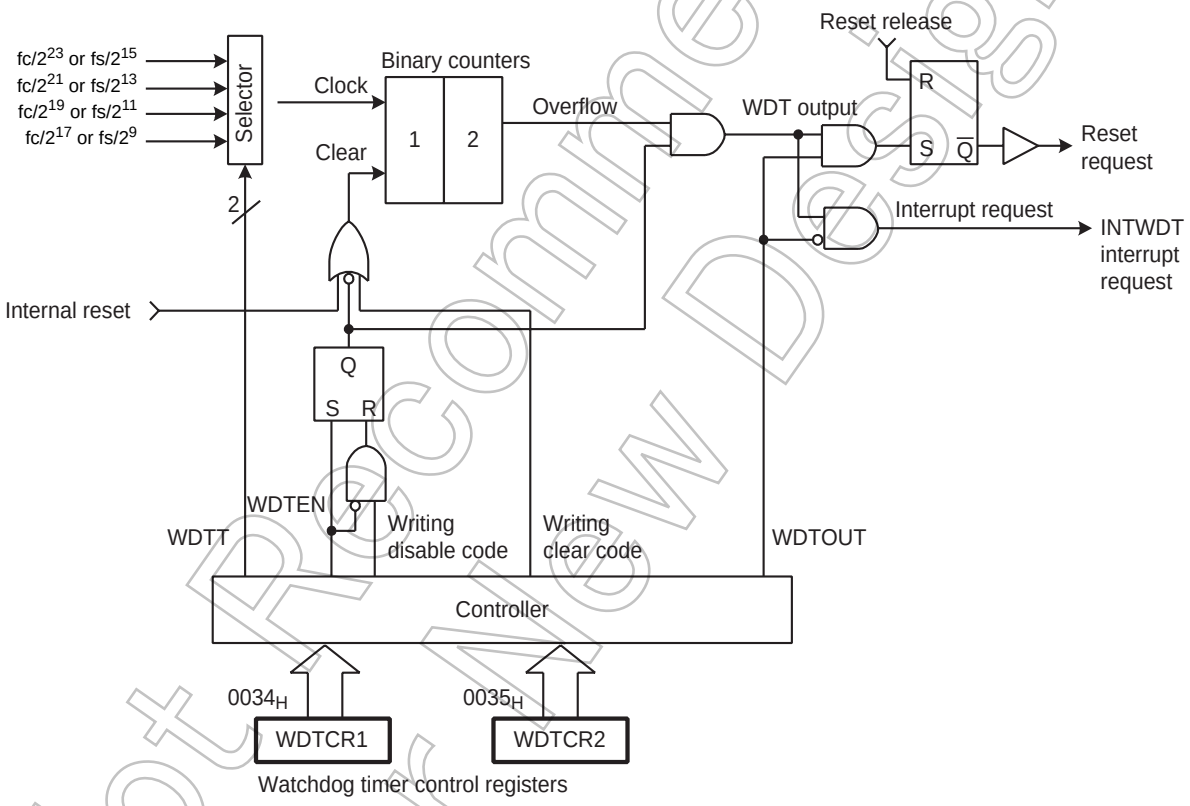

Figure 7-1 Watchdog Timer Configuration

Not Recommended for New Design

7.2 Watchdog Timer Control

The watchdog timer is controlled by the watchdog timer control registers (WDTCR1 and WDTCR2). The watchdog timer is automatically enabled after the reset release.

7.2.1 Malfunction Detection Methods Using the Watchdog Timer

The CPU malfunction is detected, as shown below.

1. Set the detection time, select the output, and clear the binary counter.
2. Clear the binary counter repeatedly within the specified detection time.

If the CPU malfunctions such as endless loops or the deadlock conditions occur for some reason, the watchdog timer output is activated by the binary-counter overflow unless the binary counters are cleared. When WDTCR1<WDTOUT> is set to “1” at this time, the reset request is generated and the $\overline{\text{RESET}}$ pin outputs a low-level signal, then internal hardware is initialized. When WDTCR1<WDTOUT> is set to “0”, a watchdog timer interrupt (INTWDT) is generated.

The watchdog timer temporarily stops counting in the STOP mode including the warm-up or IDLE/SLEEP mode, and automatically restarts (continues counting) when the STOP/IDLE/SLEEP mode is inactivated.

Note: The watchdog timer consists of an internal divider and a two-stage binary counter. When the clear code 4EH is written, only the binary counter is cleared, but not the internal divider. The minimum binary-counter overflow time, that depends on the timing at which the clear code (4EH) is written to the WDTCR2 register, may be 3/4 of the time set in WDTCR1<WDTT>. Therefore, write the clear code using a cycle shorter than 3/4 of the time set to WDTCR1<WDTT>.

Example :Setting the watchdog timer detection time to 2^{21}/fc [s], and resetting the CPU malfunction detection

```
                LD      (WDTCR2), 4EH        : Clears the binary counters.
                LD      (WDTCR1), 00001101B  : WDTT ← 10, WDTOUT ← 1
                LD      (WDTCR2), 4EH        : Clears the binary counters (always clears immediately before and
                                               after changing WDTT).
Within 3/4 of WDT   :
detection time      :
                LD      (WDTCR2), 4EH        : Clears the binary counters.
                :
Within 3/4 of WDT   :
detection time
                LD      (WDTCR2), 4EH        : Clears the binary counters.
```

Not Recommended for New Design

Watchdog Timer Control Register 1

WDTCR1 (0034H)	7	6	5	4	3	2	1	0	
			(ATAS)	(ATOUT)	WDTEN	WDTT		WDTOUT	(Initial value: **11 1001)

WDTEN	Watchdog timer enable/disable	0: Disable (Writing the disable code to WDTCR2 is required.) 1: Enable				Write only
WDTT	Watchdog timer detection time [s]		NORMAL1/2 mode		SLOW1/2 mode	Write only
			DV7CK = 0	DV7CK = 1		
		00	2^{25}/fc	2^{17}/fs	2^{17}/fs	
		01	2^{23}/fc	2^{15}/fs	2^{15}fs	
		10	2^{21}fc	2^{13}/fs	2^{13}fs	
		11	2^{19}/fc	2^{11}/fs	2^{11}/fs	
WDTOUT	Watchdog timer output select	0: Interrupt request 1: Reset request				Write only

Note 1: After clearing WDTOUT to “0”, the program cannot set it to “1”.

Note 2: fc: High-frequency clock [Hz], fs: Low-frequency clock [Hz], *: Don’t care

Note 3: WDTCR1 is a write-only register and must not be used with any of read-modify-write instructions. If WDTCR1 is read, a don’t care is read.

Note 4: To activate the STOP mode, disable the watchdog timer or clear the counter immediately before entering the STOP mode. After clearing the counter, clear the counter again immediately after the STOP mode is inactivated.

Note 5: To clear WDTEN, set the register in accordance with the procedures shown in “1.2.3 Watchdog Timer Disable”.

Watchdog Timer Control Register 2

WDTCR2 (0035H)	7	6	5	4	3	2	1	0	
									(Initial value: **** ****)

WDTCR2	Write Watchdog timer control code	4EH: Clear the watchdog timer binary counter (Clear code) B1H: Disable the watchdog timer (Disable code) D2H: Enable assigning address trap area Others: Invalid	Write only

Note 1: The disable code is valid only when WDTCR1<WDTEN> = 0.

Note 2: *: Don’t care

Note 3: The binary counter of the watchdog timer must not be cleared by the interrupt task.

Note 4: Write the clear code 4EH using a cycle shorter than 3/4 of the time set in WDTCR1<WDTT>.

7.2.2 Watchdog Timer Enable

Setting WDTCR1<WDTEN> to “1” enables the watchdog timer. Since WDTCR1<WDTEN> is initialized to “1” during reset, the watchdog timer is enabled automatically after the reset release.

Not Recommended for New Design

7.2.3 Watchdog Timer Disable

To disable the watchdog timer, set the register in accordance with the following procedures. Setting the register in other procedures causes a malfunction of the microcontroller.

1. Set the interrupt master flag (IMF) to “0”.
2. Set WDTCR2 to the clear code (4EH).
3. Set WDTCR1<WDTEN> to “0”.
4. Set WDTCR2 to the disable code (B1H).

Note: While the watchdog timer is disabled, the binary counters of the watchdog timer are cleared.

Example :Disabling the watchdog timer

```
DI                                  : IMF ← 0
LD      (WDTCR2), 04EH              : Clears the binary coutner
LDW     (WDTCR1), 0B101H            : WDTEN ← 0, WDTCR2 ← Disable code
```

Table 7-1 Watchdog Timer Detection Time (Example: fc = 16.0 MHz, fs = 32.768 kHz)

WDTT	Watchdog Timer Detection Time[s]		
	NORMAL1/2 mode		SLOW mode
	DV7CK = 0	DV7CK = 1	
00	2.097	4	4
01	524.288 m	1	1
10	131.072 m	250 m	250 m
11	32.768 m	62.5 m	62.5 m

7.2.4 Watchdog Timer Interrupt (INTWDT)

When WDTCR1<WDTOUT> is cleared to “0”, a watchdog timer interrupt request (INTWDT) is generated by the binary-counter overflow.

A watchdog timer interrupt is the non-maskable interrupt which can be accepted regardless of the interrupt master flag (IMF).

When a watchdog timer interrupt is generated while the other interrupt including a watchdog timer interrupt is already accepted, the new watchdog timer interrupt is processed immediately and the previous interrupt is held pending. Therefore, if watchdog timer interrupts are generated continuously without execution of the RETN instruction, too many levels of nesting may cause a malfunction of the microcontroller.

To generate a watchdog timer interrupt, set the stack pointer before setting WDTCR1<WDTOUT>.

Example :Setting watchdog timer interrupt

```
LD      SP, 043FH                   : Sets the stack pointer
LD      (WDTCR1), 00001000B         : WDTOUT ← 0
```

Not Recommended for New Design

7.2.5 Watchdog Timer Reset

When a binary-counter overflow occurs while WDTCR1<WDTOUT> is set to “1”, a watchdog timer reset request is generated. When a watchdog timer reset request is generated, the $\overline{\text{RESET}}$ pin outputs a low-level signal and the internal hardware is reset. The reset time is maximum 24/fc [s] (1.5 μs @ fc = 16.0 MHz).

Note: When a watchdog timer reset is generated in the SLOW1 mode, the reset time is maximum 24/fc (high-frequency clock) since the high-frequency clock oscillator is restarted. However, when crystals have inaccuracies upon start of the high-frequency clock oscillator, the reset time should be considered as an approximate value because it has slight errors.

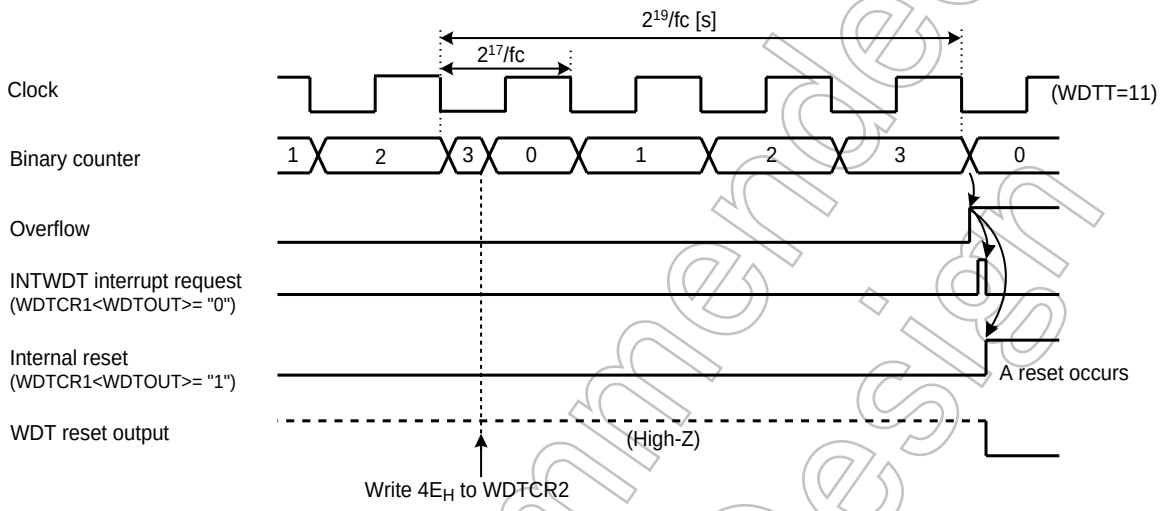

Figure 7-2 Watchdog Timer Interrupt/Reset

Not Recommended for New Design

7.3 Address Trap

The Watchdog Timer Control Register 1 and 2 share the addresses with the control registers to generate address traps.

Watchdog Timer Control Register 1

WDTCR1 (0034H)	7	6	5	4	3	2	1	0	
			ATAS	ATOUT	(WDTEN)	(WDTT)		(WDTOUT)	(Initial value: **11 1001)

ATAS	Select address trap generation in the internal RAM area	0: Generate no address trap 1: Generate address traps (After setting ATAS to "1", writing the control code D2H to WDTCR2 is reguired)	Write only
ATOUT	Select opertion at address trap	0: Interrupt request 1: Reset request	

Watchdog Timer Control Register 2

WDTCR2 (0035H)	7	6	5	4	3	2	1	0	
									(Initial value: **** ****)

WDTCR2	Write Watchdog timer control code and address trap area control code	D2H: Enable address trap area selection (ATRAP control code) 4EH: Clear the watchdog timer binary counter (WDT clear code) B1H: Disable the watchdog timer (WDT disable code) Others: Invalid	Write only

7.3.1 Selection of Address Trap in Internal RAM (ATAS)

WDTCR1<ATAS> specifies whether or not to generate address traps in the internal RAM area. To execute an instruction in the internal RAM area, clear WDTCR1<ATAS> to "0". To enable the WDTCR1<ATAS> setting, set WDTCR1<ATAS> and then write D2H to WDTCR2.

Executing an instruction in the SFR area generates an address trap unconditionally regardless of the setting in WDTCR1<ATAS>.

7.3.2 Selection of Operation at Address Trap (ATOUT)

When an address trap is generated, either the interrupt request or the reset request can be selected by WDTCR1<ATOUT>.

7.3.3 Address Trap Interrupt (INTATRAP)

While WDTCR1<ATOUT> is "0", if the CPU should start looping for some cause such as noise and an attempt be made to fetch an instruction from the on-chip RAM (while WDTCR1<ATAS> is "1") or the SFR area, address trap interrupt (INTATRAP) will be generated.

An address trap interrupt is a non-maskable interrupt which can be accepted regardless of the interrupt master flag (IMF).

When an address trap interrupt is generated while the other interrupt including a watchdog timer interrupt is already accepted, the new address trap is processed immediately and the previous interrupt is held pending. Therefore, if address trap interrupts are generated continuously without execution of the RETN instruction, too many levels of nesting may cause a malfunction of the microcontroller.

To generate address trap interrupts, set the stack pointer beforehand.

Not Recommended for New Design

7.3.4 Address Trap Reset

While WDTCR1<ATOUT> is “1”, if the CPU should start looping for some cause such as noise and an attempt be made to fetch an instruction from the on-chip RAM (while WDTCR1<ATAS> is “1”) or the SFR area, address trap reset will be generated.

When an address trap reset request is generated, the $\overline{\text{RESET}}$ pin outputs a low-level signal and the internal hardware is reset. The reset time is maximum 24/fc [s] (1.5 μs @ fc = 16.0 MHz).

Note: When an address trap reset is generated in the SLOW1 mode, the reset time is maximum 24/fc (high-frequency clock) since the high-frequency clock oscillator is restarted. However, when crystals have inaccuracies upon start of the high-frequency clock oscillator, the reset time should be considered as an approximate value because it has slight errors.

Not Recommended for New Design

Not Recommended for New Design

8. 16-Bit TimerCounter 1 (TC1)

8.1 Configuration

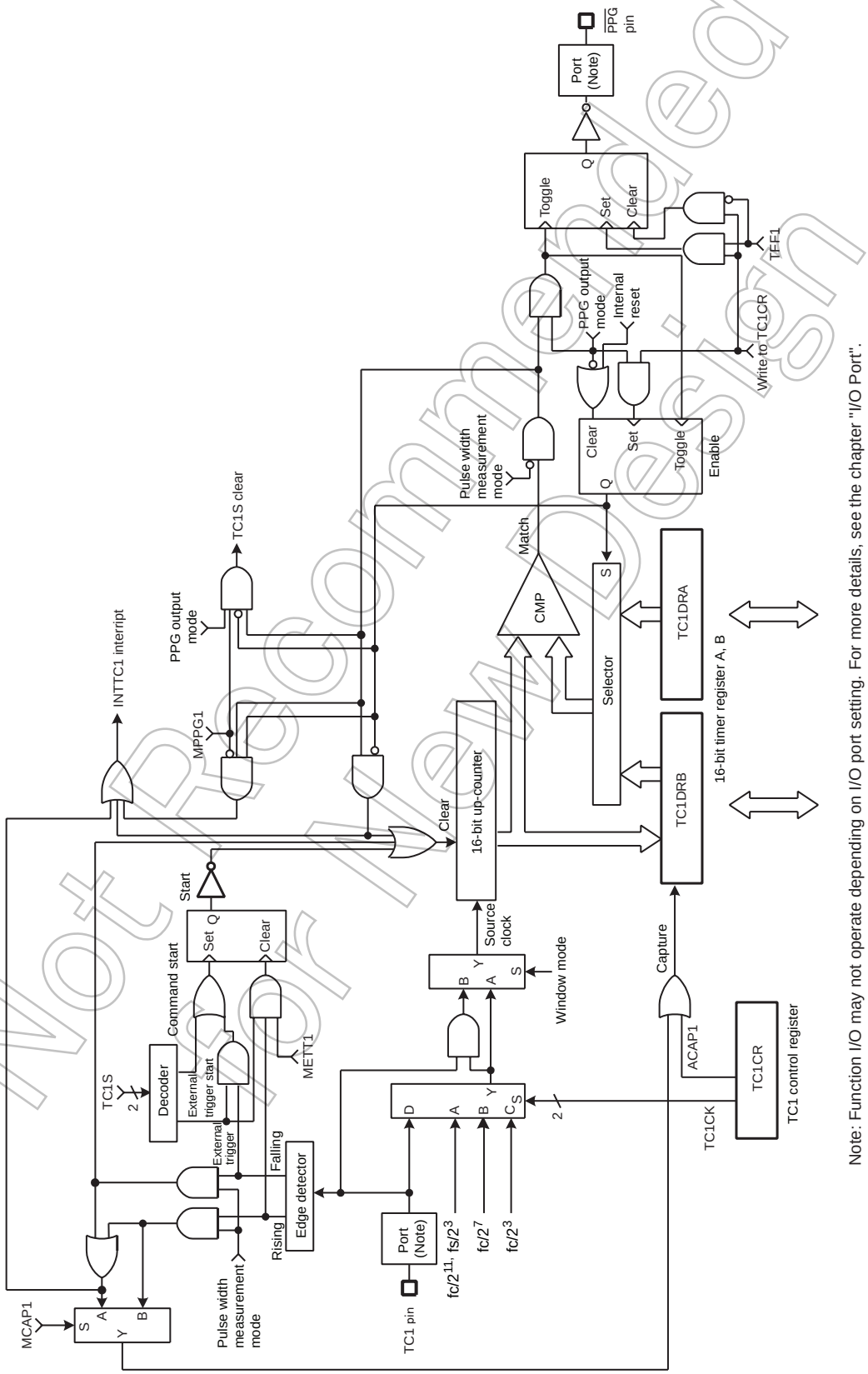

Figure 8-1 TimerCounter 1 (TC1)

Not Recommended for New Design

8.2 TimerCounter Control

The TimerCounter 1 is controlled by the TimerCounter 1 control register (TC1CR) and two 16-bit timer registers (TC1DRA and TC1DRB).

Timer Register

	15	14	13	12	11	10	9	8	7	6	5	4	3	2	1	0
TC1DRA (0011H, 0010H)	TC1DRAH (0011H)								TC1DRAL (0010H)							
	(Initial value: 1111 1111 1111 1111)								Read/Write							
TC1DRB (0013H, 0012H)	TC1DRBH (0013H)								TC1DRBL (0012H)							
	(Initial value: 1111 1111 1111 1111)								Read/Write (Write enabled only in the PPG output mode)							

TimerCounter 1 Control Register

	7	6	5	4	3	2	1	0	
TC1CR (0014H)	TFF1	ACAP1 MCAP1 METT1 MPPG1	TC1S		TC1CK		TC1M		Read/Write (Initial value: 0000 0000)

TFF1	Timer F/F1 control	0: Clear			1: Set				R/W
ACAP1	Auto capture control	0:Auto-capture disable			1:Auto-capture enable				R/W
MCAP1	Pulse width measure-ment mode control	0:Double edge capture			1:Single edge capture				
METT1	External trigger timer mode control	0:Trigger start			1:Trigger start and stop				
MPPG1	PPG output control	0:Continuous pulse generation			1:One-shot				
TC1S	TC1 start control		Timer	Extrig-ger	Event	Win-dow	Pulse	PPG	R/W
		00: Stop and counter clear	O	O	O	O	O	O	
		01: Command start	O	–	–	–	–	O	
		10: Rising edge start (Ex-trigger/Pulse/PPG) Rising edge count (Event) Positive logic count (Window)	–	O	O	O	O	O	
		11: Falling edge start (Ex-trigger/Pulse/PPG) Falling edge count (Event) Negative logic count (Window)	–	O	O	O	O	O	
TC1CK	TC1 source clock select [Hz]		NORMAL1/2, IDLE1/2 mode				Divider	SLOW, SLEEP mode	R/W
			DV7CK = 0		DV7CK = 1				
		00	$fc/2^{11}$		$fs/2^3$		DV9	$fs/2^3$	
		01	$fc/2^7$		$fc/2^7$		DV5	–	
		10	$fc/2^3$		$fc/2^3$		DV1	–	
		11	External clock (TC1 pin input)						
TC1M	TC1 operating mode select	00: Timer/external trigger timer/event counter mode 01: Window mode 10: Pulse width measurement mode 11: PPG (Programmable pulse generate) output mode							R/W

Note 1: fc: High-frequency clock [Hz], fs: Low-frequency clock [Hz]

Note 2: The timer register consists of two shift registers. A value set in the timer register becomes valid at the rising edge of the first source clock pulse that occurs after the upper byte (TC1DRAH and TC1DRBH) is written. Therefore, write the lower byte and the upper byte in this order (it is recommended to write the register with a 16-bit access instruction). Writing only the lower byte (TC1DRAL and TC1DRBL) does not enable the setting of the timer register.

Note 3: To set the mode, source clock, PPG output control and timer F/F control, write to TC1CR1 during TC1S=00. Set the timer F/F1 control until the first timer start after setting the PPG mode.

Not Recommended for New Design

Note 4: Auto-capture can be used only in the timer, event counter, and window modes.

Note 5: To set the timer registers, the following relationship must be satisfied.
TC1DRA > TC1DRB > 1 (PPG output mode), TC1DRA > 1 (other modes)

Note 6: Set TFF1 to “0” in the mode except PPG output mode.

Note 7: Set TC1DRB after setting TC1M to the PPG output mode.

Note 8: When the STOP mode is entered, the start control (TC1S) is cleared to “00” automatically, and the timer stops. After the STOP mode is exited, set the TC1S to use the timer counter again.

Note 9: Use the auto-capture function in the operative condition of TC1. A captured value may not be fixed if it's read after the execution of the timer stop or auto-capture disable. Read the capture value in a capture enabled condition.

Note 10: Since the up-counter value is captured into TC1DRB by the source clock of up-counter after setting TC1CR<ACAP1> to "1". Therefore, to read the captured value, wait at least one cycle of the internal source clock before reading TC1DRB for the first time.

Not Recommended for New Design

8.3 Function

TimerCounter 1 has six types of operating modes: timer, external trigger timer, event counter, window, pulse width measurement, programmable pulse generator output modes.

8.3.1 Timer mode

In the timer mode, the up-counter counts up using the internal clock. When a match between the up-counter and the timer register 1A (TC1DRA) value is detected, an INTTC1 interrupt is generated and the up-counter is cleared. After being cleared, the up-counter restarts counting. Setting TC1CR<ACAP1> to “1” captures the up-counter value into the timer register 1B (TC1DRB) with the auto-capture function. Use the auto-capture function in the operative condition of TC1. A captured value may not be fixed if it's read after the execution of the timer stop or auto-capture disable. Read the capture value in a capture enabled condition. Since the up-counter value is captured into TC1DRB by the source clock of up-counter after setting TC1CR<ACAP1> to "1". Therefore, to read the captured value, wait at least one cycle of the internal source clock before reading TC1DRB for the first time.

Table 8-1 Internal Source Clock for TimerCounter 1 (Example: fc = 16 MHz, fs = 32.768 kHz)

TC1CK	NORMAL1/2, IDLE1/2 mode				SLOW, SLEEP mode	
	DV7CK = 0		DV7CK = 1			
	Resolution [μs]	Maximum Time Setting [s]	Resolution [μs]	Maximum Time Setting [s]	Resolution [μs]	Maximum Time Setting [s]
00	128	8.39	244.14	16.0	244.14	16.0
01	8.0	0.524	8.0	0.524	–	–
10	0.5	32.77 m	0.5	32.77 m	–	–

Example 1 :Setting the timer mode with source clock $fc/2^{11}$ [Hz] and generating an interrupt 1 second later (fc = 16 MHz, TBTCR<DV7CK> = “0”)

```
LDW     (TC1DRA), 1E84H     ; Sets the timer register (1 s ÷ 2^11/fc = 1E84H)
DI                          ; IMF= “0”
SET     (EIRL). 7           ; Enables INTTC1
EI                          ; IMF= “1”
LD      (TC1CR), 00000000B  ; Selects the source clock and mode
LD      (TC1CR), 00010000B  ; Starts TC1
```

Example 2 :Auto-capture

```
LD      (TC1CR), 01010000B  ; ACAP1 ← 1
:       :
LD      WA, (TC1DRB)        ; Reads the capture value
```

Note: Since the up-counter value is captured into TC1DRB by the source clock of up-counter after setting TC1CR<ACAP1> to "1". Therefore, to read the captured value, wait at least one cycle of the internal source clock before reading TC1DRB for the first time.

Not Recommended for New Design

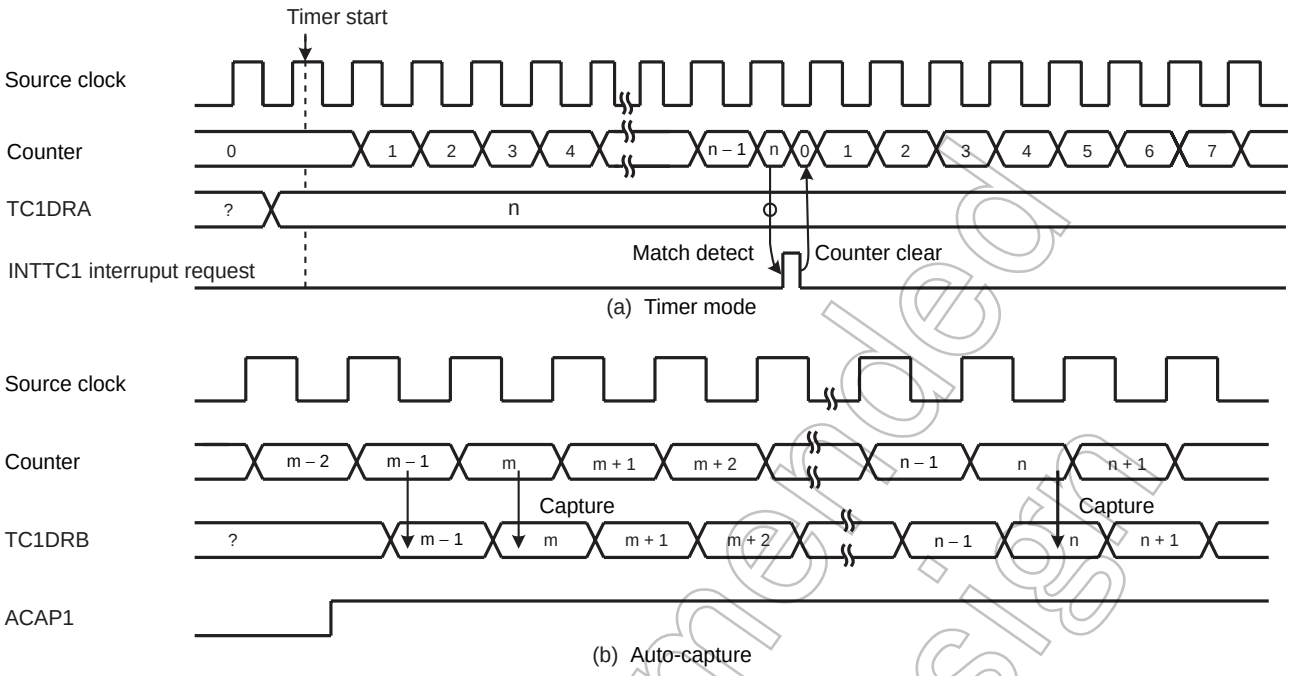

Figure 8-2 Timer Mode Timing Chart

Not Recommended for New Design

8.3.2 External Trigger Timer Mode

In the external trigger timer mode, the up-counter starts counting by the input pulse triggering of the TC1 pin, and counts up at the edge of the internal clock. For the trigger edge used to start counting, either the rising or falling edge is defined in TC1CR<TC1S>.

- When TC1CR<METT1> is set to “1” (trigger start and stop)

  When a match between the up-counter and the TC1DRA value is detected after the timer starts, the up-counter is cleared and halted and an INTTC1 interrupt request is generated.

  If the edge opposite to trigger edge is detected before detecting a match between the up-counter and the TC1DRA, the up-counter is cleared and halted without generating an interrupt request. Therefore, this mode can be used to detect exceeding the specified pulse by interrupt.

  After being halted, the up-counter restarts counting when the trigger edge is detected.

- When TC1CR<METT1> is set to “0” (trigger start)

  When a match between the up-counter and the TC1DRA value is detected after the timer starts, the up-counter is cleared and halted and an INTTC1 interrupt request is generated.

  The edge opposite to the trigger edge has no effect in count up. The trigger edge for the next counting is ignored if detecting it before detecting a match between the up-counter and the TC1DRA.

Since the TC1 pin input has the noise rejection, pulses of 4/fc [s] or less are rejected as noise. A pulse width of 12/fc [s] or more is required to ensure edge detection. The rejection circuit is turned off in the SLOW1/2 or SLEEP1/2 mode, but a pulse width of one machine cycle or more is required.

Example 1 :Generating an interrupt 1 ms after the rising edge of the input pulse to the TC1 pin (fc =16 MHz)

```
LDW     (TC1DRA), 007DH      ; 1ms ÷ 2^7/fc = 7DH
DI                           ; IMF= “0”
SET     (EIRL). 7            ; Enables INTTC1 interrupt
EI                           ; IMF= “1”
LD      (TC1CR), 00000100B   ; Selects the source clock and mode
LD      (TC1CR), 00100100B   ; Starts TC1 external trigger, METT1 = 0
```

Example 2 :Generating an interrupt when the low-level pulse with 4 ms or more width is input to the TC1 pin (fc =16 MHz)

```
LDW     (TC1DRA), 01F4H      ; 4 ms ÷ 2^7/fc = 1F4H
DI                           ; IMF= “0”
SET     (EIRL). 7            ; Enables INTTC1 interrupt
EI                           ; IMF= “1”
LD      (TC1CR), 00000100B   ; Selects the source clock and mode
LD      (TC1CR), 01110100B   ; Starts TC1 external trigger, METT1 = 0
```

Not Recommended for New Design

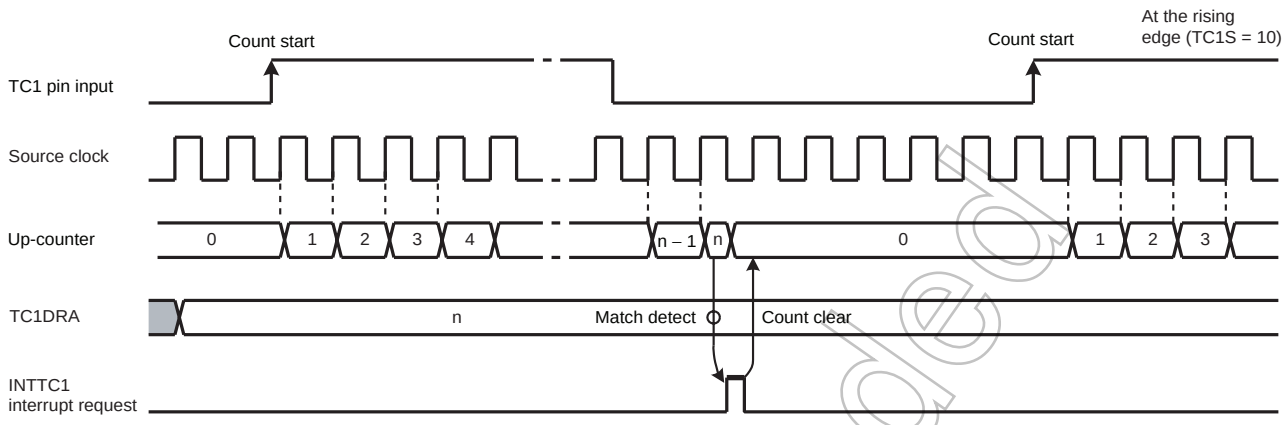

(a) Trigger start (METT1 = 0)

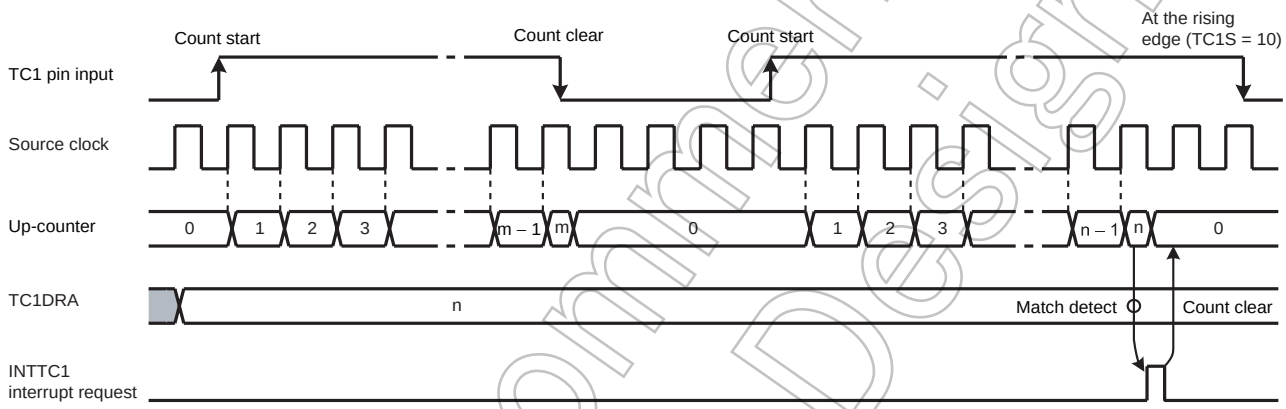

Note: m < n

(b) Trigger start and stop (METT1 = 1)

Figure 8-3 External Trigger Timer Mode Timing Chart

Not Recommended for New Design

8.3.3 Event Counter Mode

In the event counter mode, the up-counter counts up at the edge of the input pulse to the TC1 pin. Either the rising or falling edge of the input pulse is selected as the count up edge in TC1CR<TC1S>.

When a match between the up-counter and the TC1DRA value is detected, an INTTC1 interrupt is generated and the up-counter is cleared. After being cleared, the up-counter restarts counting at each edge of the input pulse to the TC1 pin. Since a match between the up-counter and the value set to TC1DRA is detected at the edge opposite to the selected edge, an INTTC1 interrupt request is generated after a match of the value at the edge opposite to the selected edge.

Two or more machine cycles are required for the low-or high-level pulse input to the TC1 pin.

Setting TC1CR<ACAP1> to “1” captures the up-counter value into TC1DRB with the auto capture function. Use the auto-capture function in the operative condition of TC1. A captured value may not be fixed if it's read after the execution of the timer stop or auto-capture disable. Read the capture value in a capture enabled condition. Since the up-counter value is captured into TC1DRB by the source clock of up-counter after setting TC1CR<ACAP1> to "1". Therefore, to read the captured value, wait at least one cycle of the internal source clock before reading TC1DRB for the first time.

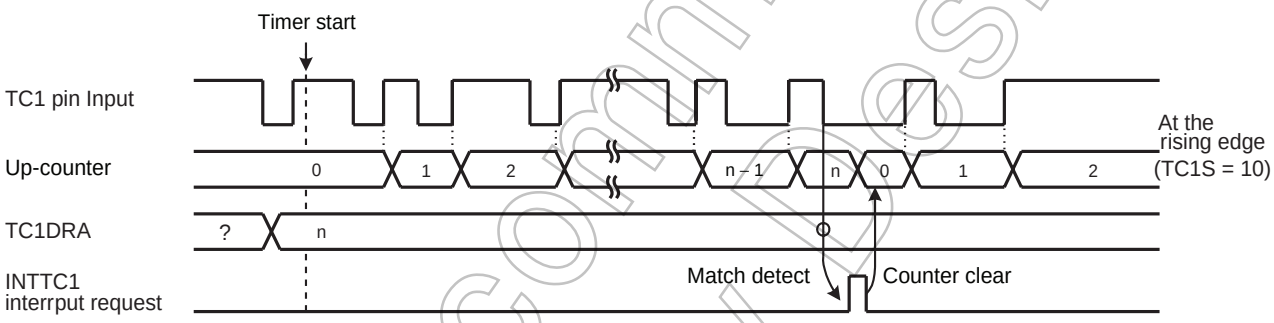

Figure 8-4 Event Counter Mode Timing Chart

Table 8-2 Input Pulse Width to TC1 Pin

	Minimum Pulse Width [s]	
	NORMAL1/2, IDLE1/2 Mode	SLOW1/2, SLEEP1/2 Mode
High-going	2^3/fc	2^3/fs
Low-going	2^3/fc	2^3/fs

Not Recommended for New Design

8.3.4 Window Mode

In the window mode, the up-counter counts up at the rising edge of the pulse that is logical ANDed product of the input pulse to the TC1 pin (window pulse) and the internal source clock. Either the positive logic (count up during high-going pulse) or negative logic (count up during low-going pulse) can be selected.

When a match between the up-counter and the TC1DRA value is detected, an INTTC1 interrupt is generated and the up-counter is cleared.

Define the window pulse to the frequency which is sufficiently lower than the internal source clock programmed with TC1CR<TC1CK>.

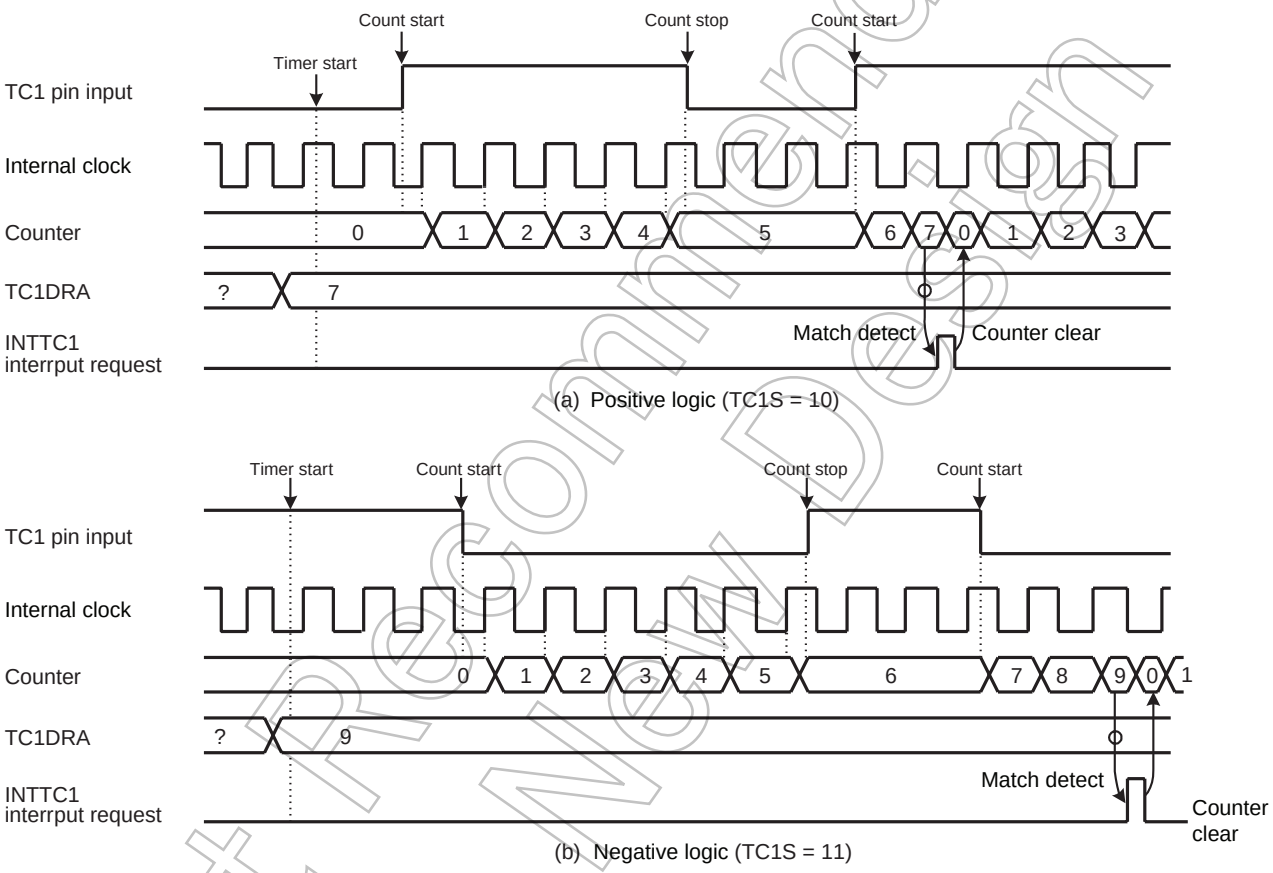

Figure 8-5 Window Mode Timing Chart

Not Recommended for New Design

8.3.5 Pulse Width Measurement Mode

In the pulse width measurement mode, the up-counter starts counting by the input pulse triggering of the TC1 pin, and counts up at the edge of the internal clock. Either the rising or falling edge of the internal clock is selected as the trigger edge in TC1CR<TC1S>. Either the single- or double-edge capture is selected as the trigger edge in TC1CR<MCAP1>.

- When TC1CR<MCAP1> is set to “1” (single-edge capture)

  Either high- or low-level input pulse width can be measured. To measure the high-level input pulse width, set the rising edge to TC1CR<TC1S>. To measure the low-level input pulse width, set the falling edge to TC1CR<TC1S>.

  When detecting the edge opposite to the trigger edge used to start counting after the timer starts, the up-counter captures the up-counter value into TC1DRB and generates an INTTC1 interrupt request. The up-counter is cleared at this time, and then restarts counting when detecting the trigger edge used to start counting.

- When TC1CR<MCAP1> is set to “0” (double-edge capture)

  The cycle starting with either the high- or low-going input pulse can be measured. To measure the cycle starting with the high-going pulse, set the rising edge to TC1CR<TC1S>. To measure the cycle starting with the low-going pulse, set the falling edge to TC1CR<TC1S>.

  When detecting the edge opposite to the trigger edge used to start counting after the timer starts, the up-counter captures the up-counter value into TC1DRB and generates an INTTC1 interrupt request. The up-counter continues counting up, and captures the up-counter value into TC1DRB and generates an INTTC1 interrupt request when detecting the trigger edge used to start counting. The up-counter is cleared at this time, and then continues counting.

Note 1: The captured value must be read from TC1DRB until the next trigger edge is detected. If not read, the captured value becomes a don’t care. It is recommended to use a 16-bit access instruction to read the captured value from TC1DRB.

Note 2: For the single-edge capture, the counter after capturing the value stops at “1” until detecting the next edge. Therefore, the second captured value is “1” larger than the captured value immediately after counting starts.

Note 3: The first captured value after the timer starts may be read incorrectively, therefore, ignore the first captured value.

Not Recommended for New Design

Example :Duty measurement (resolution fc/2^7 [Hz])

```
                CLR     (INTTC1SW). 0       ; INTTC1 service switch initial setting
                                              Address set to convert INTTC1SW at each INTTC1
                LD      (TC1CR), 00000110B  ; Sets the TC1 mode and source clock
                DI                          ; IMF= "0"
                SET     (EIRL). 7           ; Enables INTTC1
                EI                          ; IMF= "1"
                LD      (TC1CR), 00100110B  ; Starts TC1 with an external trigger at MCAP1 = 0
                :
PINTTC1:        CPL     (INTTC1SW). 0       ; INTTC1 interrupt, inverts and tests INTTC1 service switch
                JRS     F, SINTTC1
                LD      A, (TC1DRBL)        ; Reads TC1DRB (High-level pulse width)
                LD      W,(TC1DRBH)
                LD      (HPULSE), WA        ; Stores high-level pulse width in RAM
                RETI
SINTTC1:        LD      A, (TC1DRBL)        ; Reads TC1DRB (Cycle)
                LD      W,(TC1DRBH)
                LD      (WIDTH), WA         ; Stores cycle in RAM
                :
                RETI                        ; Duty calculation
                :
VINTTC1:        DW      PINTTC1             ; INTTC1 Interrupt vector
```

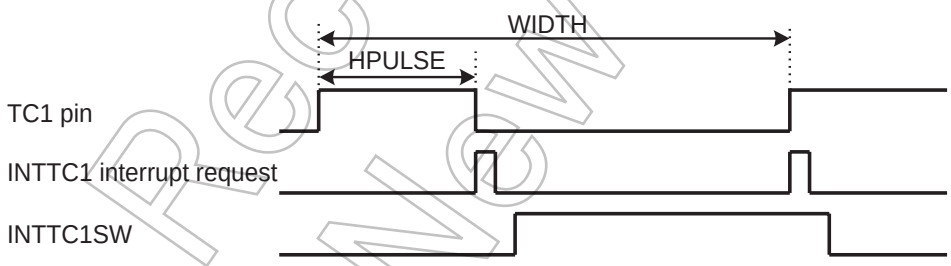

Not Recommended for New Design

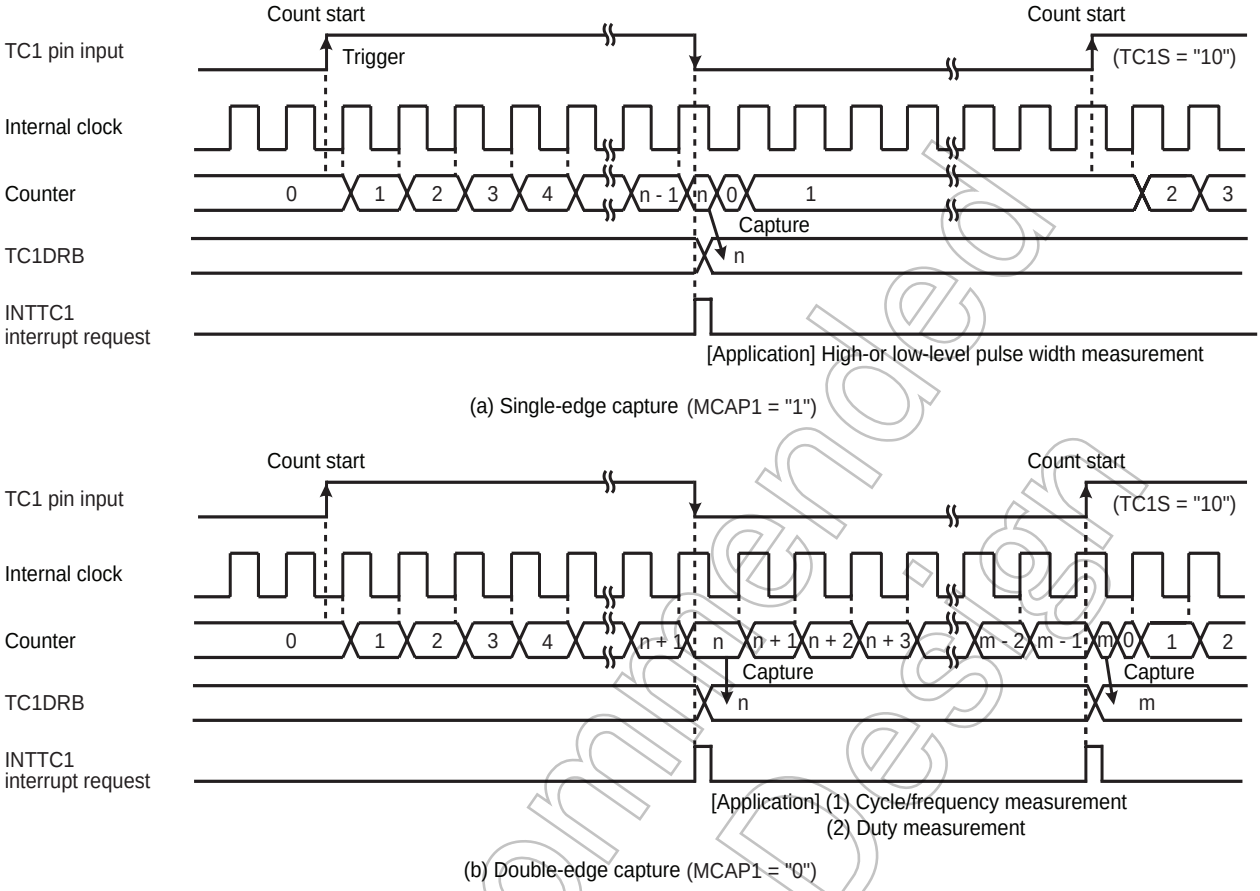

Figure 8-6 Pulse Width Measurement Mode

Not Recommended for New Design

8.3.6 Programmable Pulse Generate (PPG) Output Mode

In the programmable pulse generation (PPG) mode, an arbitrary duty pulse is generated by counting performed in the internal clock. To start the timer, TC1CR<TC1S> specifies either the edge of the input pulse to the TC1 pin or the command start. TC1CR<MPPG1> specifies whether a duty pulse is produced continuously or not (one-shot pulse).

- When TC1CR<MPPG1> is set to “0” (Continuous pulse generation)

  When a match between the up-counter and the TC1DRB value is detected after the timer starts, the level of the $\overline{PPG}$ pin is inverted and an INTTC1 interrupt request is generated. The up-counter continues counting. When a match between the up-counter and the TC1DRA value is detected, the level of the $\overline{PPG}$ pin is inverted and an INTTC1 interrupt request is generated. The up-counter is cleared at this time, and then continues counting and pulse generation.

  When TC1S is cleared to “00” during PPG output, the $\overline{PPG}$ pin retains the level immediately before the counter stops.

- When TC1CR<MPPG1> is set to “1” (One-shot pulse generation)

  When a match between the up-counter and the TC1DRB value is detected after the timer starts, the level of the $\overline{PPG}$ pin is inverted and an INTTC1 interrupt request is generated. The up-counter continues counting. When a match between the up-counter and the TC1DRA value is detected, the level of the $\overline{PPG}$ pin is inverted and an INTTC1 interrupt request is generated. TC1CR<TC1S> is cleared to “00” automatically at this time, and the timer stops. The pulse generated by PPG retains the same level as that when the timer stops.

Since the output level of the $\overline{PPG}$ pin can be set with TC1CR<TFF1> when the timer starts, a positive or negative pulse can be generated. Since the inverted level of the timer F/F1 output level is output to the $\overline{PPG}$ pin, specify TC1CR<TFF1> to “0” to set the high level to the $\overline{PPG}$ pin, and “1” to set the low level to the $\overline{PPG}$ pin. Upon reset, the timer F/F1 is initialized to “0”.

Note 1: To change TC1DRA or TC1DRB during a run of the timer, set a value sufficiently larger than the count value of the counter. Setting a value smaller than the count value of the counter during a run of the timer may generate a pulse different from that specified.

Note 2: Do not change TC1CR<TFF1> during a run of the timer. TC1CR<TFF1> can be set correctly only at initialization (after reset). When the timer stops during PPG, TC1CR<TFF1> can not be set correctly from this point onward if the PPG output has the level which is inverted of the level when the timer starts. (Setting TC1CR<TFF1> specifies the timer F/F1 to the level inverted of the programmed value.) Therefore, the timer F/F1 needs to be initialized to ensure an arbitrary level of the PPG output. To initialize the timer F/F1, change TC1CR<TC1M> to the timer mode (it is not required to start the timer mode), and then set the PPG mode. Set TC1CR<TFF1> at this time.

Note 3: In the PPG mode, the following relationship must be satisfied.
TC1DRA > TC1DRB

Note 4: Set TC1DRB after changing the mode of TC1M to the PPG mode.

Not Recommended for New Design

Example :Generating a pulse which is high-going for 800 μs and low-going for 200 μs
(fc = 16 MHz)

```
                Setting port
LD              (TC1CR), 10000111B      ; Sets the PPG mode, selects the source clock
LDW             (TC1DRA), 007DH         ; Sets the cycle (1 ms ÷ 2^7/fc ms = 007DH)
LDW             (TC1DRB), 0019H         ; Sets the low-level pulse width (200 μs ÷ 2^7/fc = 0019H)
LD              (TC1CR), 10010111B      ; Starts the timer
```

Example :After stopping PPG, setting the PPG pin to a high-level to restart PPG
(fc = 16 MHz)

```
                Setting port
LD              (TC1CR), 10000111B      ; Sets the PPG mode, selects the source clock
LDW             (TC1DRA), 007DH         ; Sets the cycle (1 ms ÷ 2^7/fc μs = 007DH)
LDW             (TC1DRB), 0019H         ; Sets the low-level pulse width (200 μs ÷ 2^7/fc = 0019H)
LD              (TC1CR), 10010111B      ; Starts the timer
:               :
LD              (TC1CR), 10000111B      ; Stops the timer
LD              (TC1CR), 10000100B      ; Sets the timer mode
LD              (TC1CR), 00000111B      ; Sets the PPG mode, TFF1 = 0
LD              (TC1CR), 00010111B      ; Starts the timer
```

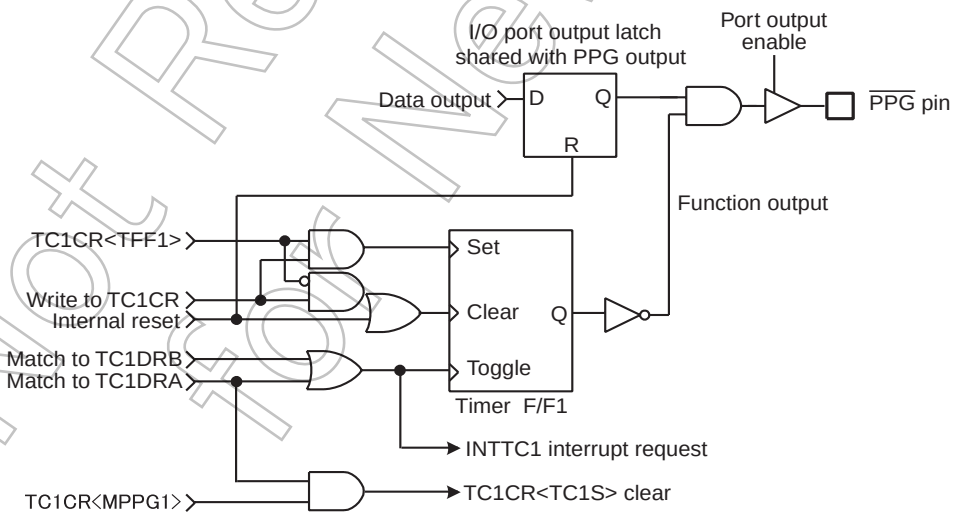

Figure 8-7 $\overline{\text{PPG}}$ Output

Not Recommended for New Design

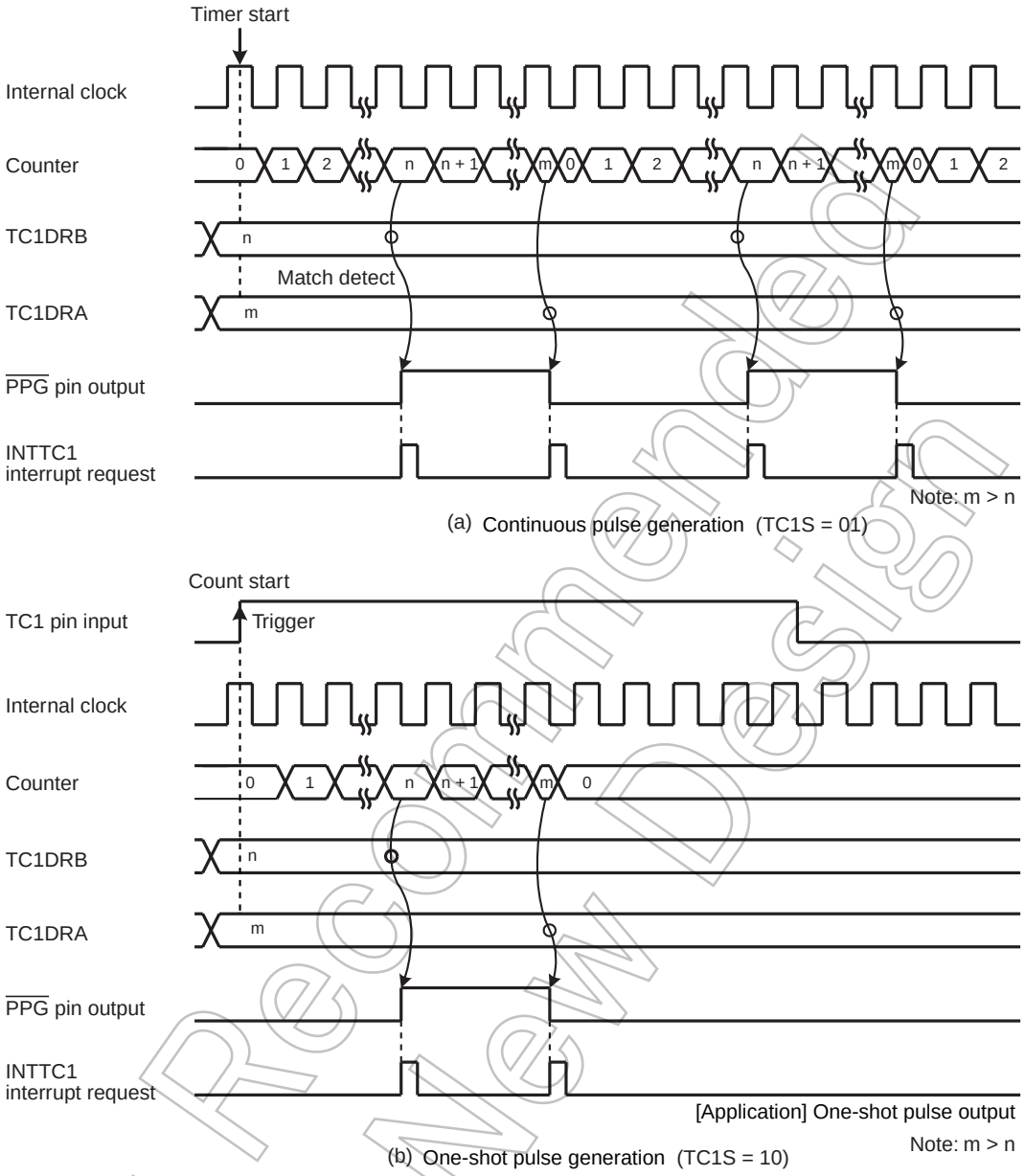

Figure 8-8 PPG Mode Timing Chart

Not Recommended for New Design

Not Recommended for New Design

9. 8-Bit TimerCounter (TC3, TC4)

9.1 Configuration

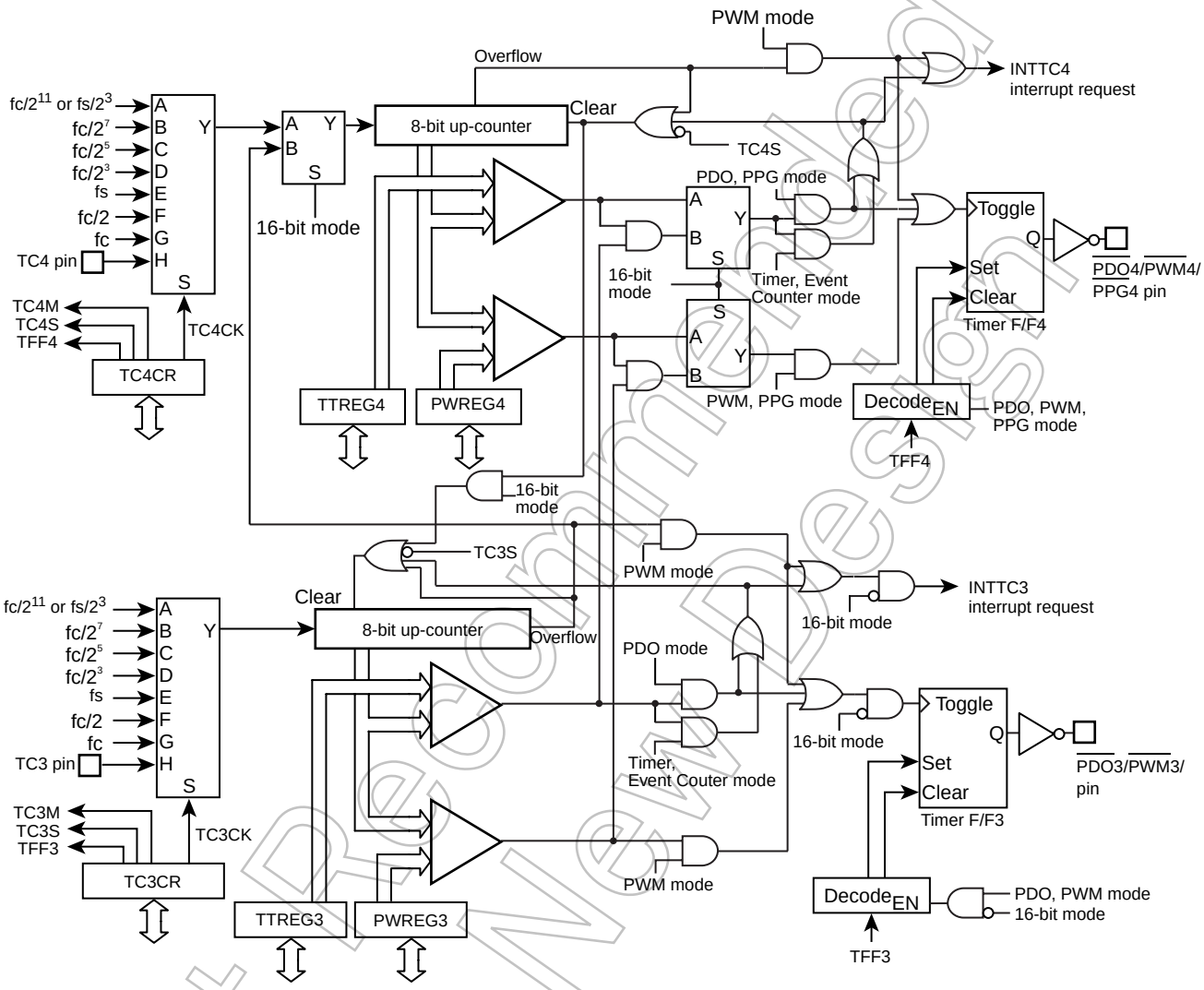

Figure 9-1 8-Bit TimerCouter 3, 4

Not Recommended for New Design

9.2 TimerCounter Control

The TimerCounter 3 is controlled by the TimerCounter 3 control register (TC3CR) and two 8-bit timer registers (TTREG3, PWREG3).

TimerCounter 3 Timer Register

TTREG3 (0018H) R/W	7	6	5	4	3	2	1	0	
									(Initial value: 1111 1111)

PWREG3 (001AH) R/W	7	6	5	4	3	2	1	0	
									(Initial value: 1111 1111)

Note 1: Do not change the timer register (TTREG3) setting while the timer is running.

Note 2: Do not change the timer register (PWREG3) setting in the operating mode except the 8-bit and 16-bit PWM modes while the timer is running.

TimerCounter 3 Control Register

TC3CR (0016H)	7	6	5	4	3	2	1	0	
	TFF3	TC3CK			TC3S	TC3M			(Initial value: 0000 0000)

TFF3	Time F/F3 control	0: Clear 1: Set				R/W
TC3CK	Operating clock selection [Hz]		NORMAL1/2, IDLE1/2 mode		SLOW1/2 SLEEP1/2 mode	R/W
			DV7CK = 0	DV7CK = 1		
		000	$fc/2^{11}$	$fs/2^{3}$	$fs/2^{3}$	
		001	$fc/2^{7}$	$fc/2^{7}$	–	
		010	$fc/2^{5}$	$fc/2^{5}$	–	
		011	$fc/2^{3}$	$fc/2^{3}$	–	
		100	fs	fs	fs	
		101	fc/2	fc/2	–	
		110	fc	fc	fc (Note 8)	
		111	TC3 pin input			
TC3S	TC3 start control	0: Operation stop and counter clear 1: Operation start				R/W
TC3M	TC3M operating mode select	000: 8-bit timer/event counter mode 001: 8-bit programmable divider output (PDO) mode 010: 8-bit pulse width modulation (PWM) output mode 011: 16-bit mode (Each mode is selectable with TC4M.) 1**: Reserved				R/W

Note 1: fc: High-frequency clock [Hz] fs: Low-frequency clock[Hz]

Note 2: Do not change the TC3M, TC3CK and TFF3 settings while the timer is running.

Note 3: To stop the timer operation (TC3S= 1 → 0), do not change the TC3M, TC3CK and TFF3 settings. To start the timer operation (TC3S= 0 → 1), TC3M, TC3CK and TFF3 can be programmed.

Note 4: To use the TimerCounter in the 16-bit mode, set the operating mode by programming TC4CR<TC4M>, where TC3M must be fixed to 011.

Note 5: To use the TimerCounter in the 16-bit mode, select the source clock by programming TC3CK. Set the timer start control and timer F/F control by programming TC4CR<TC4S> and TC4CR<TFF4>, respectively.

Note 6: The operating clock settings are limited depending on the timer operating mode. For the detailed descriptions, see Table 9-1 and Table 9-2.

Not Recommended for New Design

Note 7: The timer register settings are limited depending on the timer operating mode. For the detailed descriptions, see Table 9-3.

Note 8: The operating clock fc in the SLOW or SLEEP mode can be used only as the high-frequency warm-up mode.

Not Recommended for New Design

The TimerCounter 4 is controlled by the TimerCounter 4 control register (TC4CR) and two 8-bit timer registers (TTREG4 and PWREG4).

TimerCounter 4 Timer Register

TTREG4 (0019H) R/W	7	6	5	4	3	2	1	0	
									(Initial value: 1111 1111)

PWREG4 (001BH) R/W	7	6	5	4	3	2	1	0	
									(Initial value: 1111 1111)

Note 1: Do not change the timer register (TTREG4) setting while the timer is running.

Note 2: Do not change the timer register (PWREG4) setting in the operating mode except the 8-bit and 16-bit PWM modes while the timer is running.

TimerCounter 4 Control Register

TC4CR (0017H)	7	6	5	4	3	2	1	0	
	TFF4	TC4CK			TC4S	TC4M			(Initial value: 0000 0000)

TFF4	Timer F/F4 control	0: Clear 1: Set			R/W
TC4CK	Operating clock selection [Hz]		NORMAL1/2, IDLE1/2 mode	SLOW1/2 SLEEP1/2 mode	R/W
			DV7CK = 0	DV7CK = 1	
		000	$fc/2^{11}$	$fs/2^3$	$fs/2^3$
		001	$fc/2^7$	$fc/2^7$	–
		010	$fc/2^5$	$fc/2^5$	–
		011	$fc/2^3$	$fc/2^3$	–
		100	fs	fs	fs
		101	fc/2	fc/2	–
		110	fc	fc	–
		111	TC4 pin input		
TC4S	TC4 start control	0: Operation stop and counter clear 1: Operation start			R/W
TC4M	TC4M operating mode select	000: 8-bit timer/event counter mode 001: 8-bit programmable divider output (PDO) mode 010: 8-bit pulse width modulation (PWM) output mode 011: Reserved 100: 16-bit timer/event counter mode 101: Warm-up counter mode 110: 16-bit pulse width modulation (PWM) output mode 111: 16-bit PPG mode			R/W

Note 1: fc: High-frequency clock [Hz] fs: Low-frequency clock [Hz]

Note 2: Do not change the TC4M, TC4CK and TFF4 settings while the timer is running.

Note 3: To stop the timer operation (TC4S= 1 → 0), do not change the TC4M, TC4CK and TFF4 settings.
To start the timer operation (TC4S= 0 → 1), TC4M, TC4CK and TFF4 can be programmed.

Note 4: When TC4M= 1** (upper byte in the 16-bit mode), the source clock becomes the TC4 overflow signal regardless of the TC3CK setting.

Note 5: To use the TimerCounter in the 16-bit mode, select the operating mode by programming TC4M, where TC3CR<TC3 M> must be set to 011.

Not Recommended for New Design

Note 6: To the TimerCounter in the 16-bit mode, select the source clock by programming TC3CR<TC3CK>. Set the timer start control and timer F/F control by programming TC4S and TFF4, respectively.

Note 7: The operating clock settings are limited depending on the timer operating mode. For the detailed descriptions, see Table 9-1 and Table 9-2.

Note 8: The timer register settings are limited depending on the timer operating mode. For the detailed descriptions, see Table 9-3.

Table 9-1 Operating Mode and Selectable Source Clock (NORMAL1/2 and IDLE1/2 Modes)

Operating mode	$fc/2^{11}$ or $fs/2^3$	$fc/2^7$	$fc/2^5$	$fc/2^3$	fs	fc/2	fc	TC3 pin input	TC4 pin input
8-bit timer	O	O	O	O	–	–	–	–	–
8-bit event counter	–	–	–	–	–	–	–	O	O
8-bit PDO	O	O	O	O	–	–	–	–	–
8-bit PWM	O	O	O	O	O	O	O	–	–
16-bit timer	O	O	O	O	–	–	–	–	–
16-bit event counter	–	–	–	–	–	–	–	O	–
Warm-up counter	–	–	–	–	O	–	–	–	–
16-bit PWM	O	O	O	O	O	O	O	O	–
16-bit PPG	O	O	O	O	–	–	–	O	–

Note 1: For 16-bit operations (16-bit timer/event counter, warm-up counter, 16-bit PWM and 16-bit PPG), set its source clock on lower bit (TC3CK).

Note 2: O : Available source clock

Table 9-2 Operating Mode and Selectable Source Clock (SLOW1/2 and SLEEP1/2 Modes)

Operating mode	$fc/2^{11}$ or $fs/2^3$	$fc/2^7$	$fc/2^5$	$fc/2^3$	fs	fc/2	fc	TC3 pin input	TC4 pin input
8-bit timer	O	–	–	–	–	–	–	–	–
8-bit event counter	–	–	–	–	–	–	–	O	O
8-bit PDO	O	–	–	–	–	–	–	–	–
8-bit PWM	O	–	–	–	O	–	–	–	–
16-bit timer	O	–	–	–	–	–	–	–	–
16-bit event counter	–	–	–	–	–	–	–	O	–
Warm-up counter	–	–	–	–	–	–	O	–	–
16-bit PWM	O	–	–	–	O	–	–	O	–
16-bit PPG	O	–	–	–	–	–	–	O	–

Note1: For 16-bit operations (16-bit timer/event counter, warm-up counter, 16-bit PWM and 16-bit PPG), set its source clock on lower bit (TC3CK).

Note2: O : Available source clock

Not Recommended for New Design

Table 9-3 Constraints on Register Values Being Compared

Operating mode	Register Value
8-bit timer/event counter	1≤ (TTREGn) ≤255
8-bit PDO	1≤ (TTREGn) ≤255
8-bit PWM	2≤ (PWREGn) ≤254
16-bit timer/event counter	1≤ (TTREG4, 3) ≤65535
Warm-up counter	256≤ (TTREG4, 3) ≤65535
16-bit PWM	2≤ (PWREG4, 3) ≤65534
16-bit PPG	1≤ (PWREG4, 3) < (TTREG4, 3) ≤65535 and (PWREG4, 3) + 1 < (TTREG4, 3)

Note: n = 3 to 4

Not Recommended for New Design

9.3 Function

The TimerCounter 3 and 4 have the 8-bit timer, 8-bit event counter, 8-bit programmable divider output (PDO), 8-bit pulse width modulation (PWM) output modes. The TimerCounter 3 and 4 (TC3, 4) are cascadable to form a 16-bit timer. The 16-bit timer has the operating modes such as the 16-bit timer, 16-bit event counter, warm-up counter, 16-bit pulse width modulation (PWM) output and 16-bit programmable pulse generation (PPG) modes.

9.3.1 8-Bit Timer Mode (TC3 and 4)

In the timer mode, the up-counter counts up using the internal clock. When a match between the up-counter and the timer register j (TTREGj) value is detected, an INTTCj interrupt is generated and the up-counter is cleared. After being cleared, the up-counter restarts counting.

Note 1: In the timer mode, fix TCjCR<TFFj> to 0. If not fixed, the $\overline{\text{PDOj, PWMj}}$ and $\overline{\text{PPGj}}$ pins may output pulses.

Note 2: In the timer mode, do not change the TTREGj setting while the timer is running. Since TTREGj is not in the shift register configuration in the timer mode, the new value programmed in TTREGj is in effect immediately after the programming. Therefore, if TTREGi is changed while the timer is running, an expected operation may not be obtained.

Note 3: j = 3, 4

Table 9-4 Source Clock for TimerCounter 3, 4 (Internal Clock)

Source Clock			Resolution		Repeated Cycle	
NORMAL1/2, IDLE1/2 mode		SLOW1/2, SLEEP1/2 mode	fc = 16 MHz	fs = 32.768 kHz	fc = 16 MHz	fs = 32.768 kHz
DV7CK = 0	DV7CK = 1					
$fc/2^{11}$ [Hz]	$fs/2^3$ [Hz]	$fs/2^3$ [Hz]	128 μs	244.14 μs	32.6 ms	62.3 ms
$fc/2^7$	$fc/2^7$	–	8 μs	–	2.0 ms	–
$fc/2^5$	$fc/2^5$	–	2 μs	–	510 μs	–
$fc/2^3$	$fc/2^3$	–	500 ns	–	127.5 μs	–

Example :Setting the timer mode with source clock $fc/2^7$ Hz and generating an interrupt 80 μs later (TimerCounter4, fc = 16.0 MHz)

```
LD      (TTREG4), 0AH          : Sets the timer register (80 μs÷2^7/fc = 0AH).
DI
SET     (EIRH), 1              : Enables INTTC4 interrupt.
EI
LD      (TC4CR), 00010000B     : Sets the operating cock to fc/2^7, and 8-bit timer mode.
LD      (TC4CR), 00011000B     : Starts TC4.
```

Not Recommended for New Design

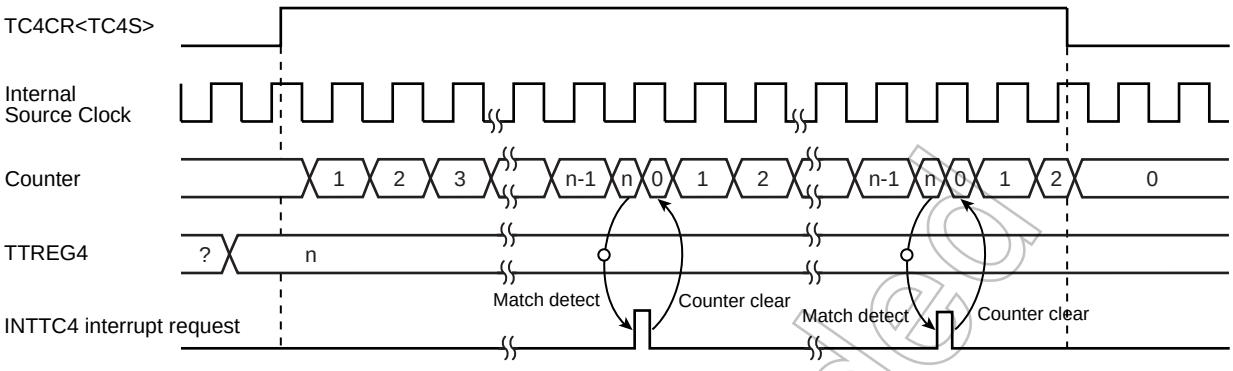

Figure 9-2 8-Bit Timer Mode Timing Chart (TC4)

9.3.2 8-Bit Event Counter Mode (TC3, 4)

In the 8-bit event counter mode, the up-counter counts up at the falling edge of the input pulse to the TCj pin. When a match between the up-counter and the TTREGj value is detected, an INTTCj interrupt is generated and the up-counter is cleared. After being cleared, the up-counter restarts counting at the falling edge of the input pulse to the TCj pin. Two machine cycles are required for the low- or high-level pulse input to the TCj pin. Therefore, a maximum frequency to be supplied is $fc/2^4$ Hz in the NORMAL1/2 or IDLE1/2 mode, and $fs/2^4$ Hz in the SLOW1/2 or SLEEP1/2 mode.

Note 1: In the event counter mode, fix TCjCR<TFFj> to 0. If not fixed, the $\overline{PDOj}$, PWMj and $\overline{PPGj}$ pins may output pulses.

Note 2: In the event counter mode, do not change the TTREGj setting while the timer is running. Since TTREGj is not in the shift register configuration in the event counter mode, the new value programmed in TTREGj is in effect immediately after the programming. Therefore, if TTREGi is changed while the timer is running, an expected operation may not be obtained.

Note 3: j = 3, 4

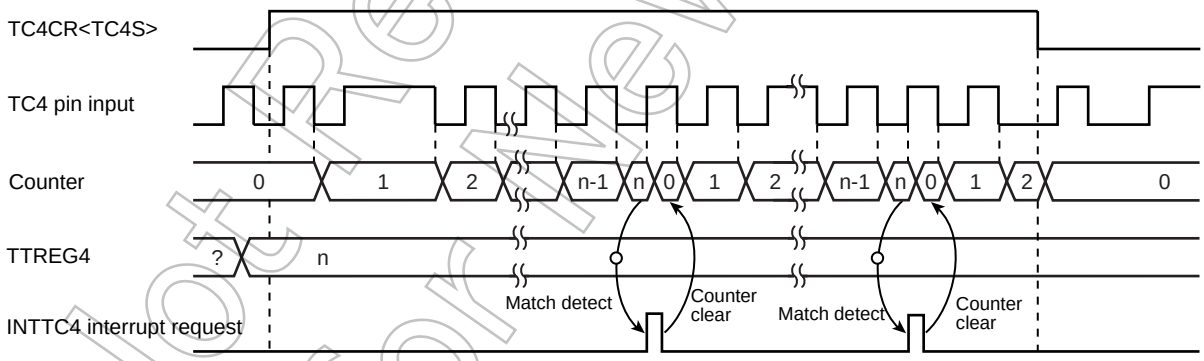

Figure 9-3 8-Bit Event Counter Mode Timing Chart (TC4)

9.3.3 8-Bit Programmable Divider Output (PDO) Mode (TC3, 4)

This mode is used to generate a pulse with a 50% duty cycle from the $\overline{PDOj}$ pin.

In the PDO mode, the up-counter counts up using the internal clock. When a match between the up-counter and the TTREGj value is detected, the logic level output from the $\overline{PDOj}$ pin is switched to the opposite state and the up-counter is cleared. The INTTCj interrupt request is generated at the time. The logic state opposite to the timer F/Fj logic level is output from the $\overline{PDOj}$ pin. An arbitrary value can be set to the timer F/Fj by TCjCR<TFFj>. Upon reset, the timer F/Fj value is initialized to 0.

To use the programmable divider output, set the output latch of the I/O port to 1.

Not Recommended for New Design

Example :Generating 1024 Hz pulse using TC4 (fc = 16.0 MHz)

```
                Setting port
LD      (TTREG4),  3DH          : 1/1024÷2^7/fc÷2 = 3DH
LD      (TC4CR),   00010001B    : Sets the operating clock to fc/2^7, and 8-bit PDO mode.
LD      (TC4CR),  00011001B     : Starts TC4.
```

Note 1: In the programmable divider output mode, do not change the TTREGj setting while the timer is running. Since TTREGj is not in the shift register configuration in the programmable divider output mode, the new value programmed in TTREGj is in effect immediately after programming. Therefore, if TTREGi is changed while the timer is running, an expected operation may not be obtained.

Note 2: When the timer is stopped during PDO output, the $\overline{\text{PDOj}}$ pin holds the output status when the timer is stopped. To change the output status, program TCjCR<TFFj> after the timer is stopped. Do not change the TCjCR<TFFj> setting upon stopping of the timer.
Example: Fixing the $\overline{\text{PDOj}}$ pin to the high level when the TimerCounter is stopped
CLR (TCjCR).3: Stops the timer.
CLR (TCjCR).7: Sets the $\overline{\text{PDOj}}$ pin to the high level.

Note 3: j = 3, 4

Not Recommended for New Design

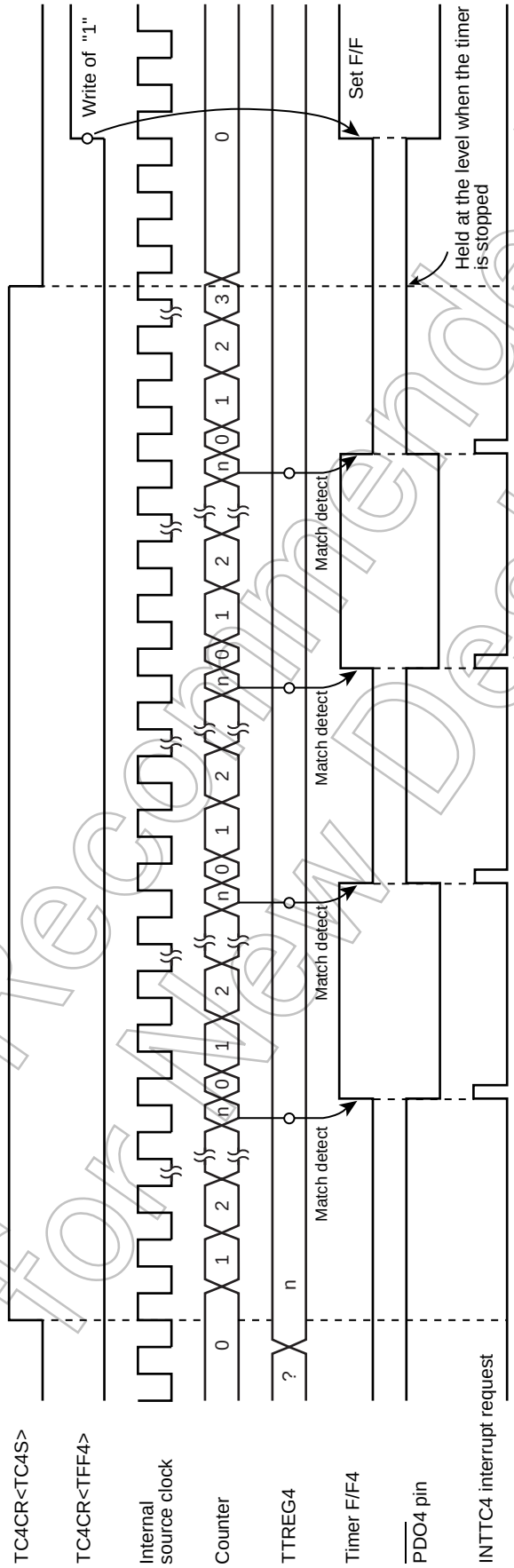

Figure 9-4 8-Bit PDO Mode Timing Chart (TC4)

Not Recommended for New Design

9.3.4 8-Bit Pulse Width Modulation (PWM) Output Mode (TC3, 4)

This mode is used to generate a pulse-width modulated (PWM) signals with up to 8 bits of resolution. The up-counter counts up using the internal clock.

When a match between the up-counter and the PWREGj value is detected, the logic level output from the timer F/Fj is switched to the opposite state. The counter continues counting. The logic level output from the timer F/Fj is switched to the opposite state again by the up-counter overflow, and the counter is cleared. The INTTCj interrupt request is generated at this time.

Since the initial value can be set to the timer F/Fj by TCjCR<TFFj>, positive and negative pulses can be generated. Upon reset, the timer F/Fj is cleared to 0.

(The logic level output from the $\overline{\text{PWMj}}$ pin is the opposite to the timer F/Fj logic level.)

Since PWREGj in the PWM mode is serially connected to the shift register, the value set to PWREGj can be changed while the timer is running. The value set to PWREGj during a run of the timer is shifted by the INTTCj interrupt request and loaded into PWREGj. While the timer is stopped, the value is shifted immediately after the programming of PWREGj. If executing the read instruction to PWREGj during PWM output, the value in the shift register is read, but not the value set in PWREGj. Therefore, after writing to PWREGj, the reading data of PWREGj is previous value until INTTCj is generated.

For the pin used for PWM output, the output latch of the I/O port must be set to 1.

Note 1: In the PWM mode, program the timer register PWREGj immediately after the INTTCj interrupt request is generated (normally in the INTTCj interrupt service routine.) If the programming of PWREGj and the interrupt request occur at the same time, an unstable value is shifted, that may result in generation of the pulse different from the programmed value until the next INTTCj interrupt request is generated.

Note 2: When the timer is stopped during PWM output, the $\overline{\text{PWMj}}$ pin holds the output status when the timer is stopped. To change the output status, program TCjCR<TFFj> after the timer is stopped. Do not change the TCjCR<TFFj> upon stopping of the timer.
Example: Fixing the $\overline{\text{PWMj}}$ pin to the high level when the TimerCounter is stopped
CLR (TCjCR).3: Stops the timer.
CLR (TCjCR).7: Sets the $\overline{\text{PWMj}}$ pin to the high level.

Note 3: To enter the STOP mode during PWM output, stop the timer and then enter the STOP mode. If the STOP mode is entered without stopping the timer when fc, fc/2 or fs is selected as the source clock, a pulse is output from the $\overline{\text{PWMj}}$ pin during the warm-up period time after exiting the STOP mode.

Note 4: j = 3, 4

Table 9-5 PWM Output Mode

Source Clock			Resolution		Repeated Cycle	
NORMAL1/2, IDLE1/2 mode		SLOW1/2, SLEEP1/2 mode	fc = 16 MHz	fs = 32.768 kHz	fc = 16 MHz	fs = 32.768 kHz
DV7CK = 0	DV7CK = 1					
$fc/2^{11}$ [Hz]	$fs/2^3$ [Hz]	$fs/2^3$ [Hz]	128 μs	244.14 μs	32.8 ms	62.5 ms
$fc/2^7$	$fc/2^7$	–	8 μs	–	2.05 ms	–
$fc/2^5$	$fc/2^5$	–	2 μs	–	512 μs	–
$fc/2^3$	$fc/2^3$	–	500 ns	–	128 μs	–
fs	fs	fs	30.5 μs	30.5 μs	7.81 ms	7.81 ms
fc/2	fc/2	–	125 ns	–	32 μs	–
fc	fc	–	62.5 ns	–	16 μs	–

Not Recommended for New Design

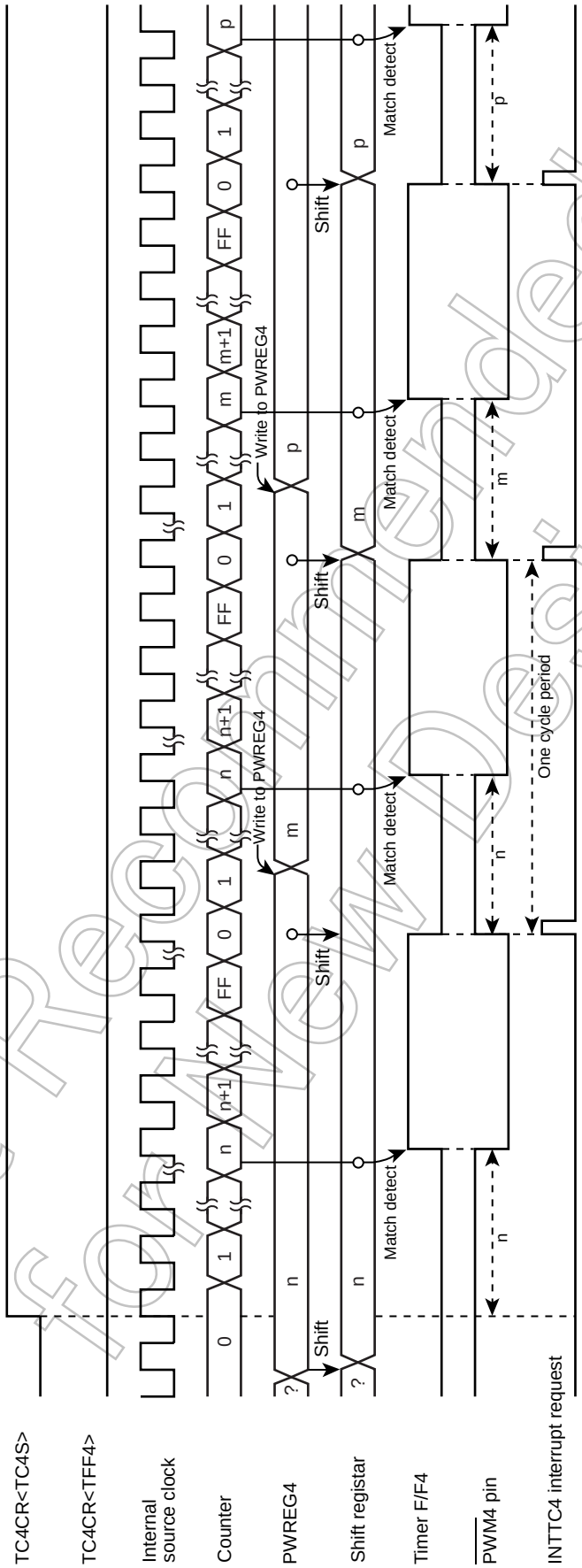

Figure 9-5 8-Bit PWM Mode Timing Chart (TC4)

Not Recommended for New Design

9.3.5 16-Bit Timer Mode (TC3 and 4)

In the timer mode, the up-counter counts up using the internal clock. The TimerCounter 3 and 4 are cascadable to form a 16-bit timer.

When a match between the up-counter and the timer register (TTREG3, TTREG4) value is detected after the timer is started by setting TC4CR<TC4S> to 1, an INTTC4 interrupt is generated and the up-counter is cleared. After being cleared, the up-counter continues counting. Program the upper byte and lower byte in this order in the timer register. (Programming only the upper or lower byte should not be attempted.)

Note 1: In the timer mode, fix TCjCR<TFFj> to 0. If not fixed, the $\overline{PDOj}$, $\overline{PWMj}$, and $\overline{PPGj}$ pins may output a pulse.

Note 2: In the timer mode, do not change the TTREGj setting while the timer is running. Since TTREGj is not in the shift register configuration in the timer mode, the new value programmed in TTREGj is in effect immediately after programming of TTREGj. Therefore, if TTREGj is changed while the timer is running, an expected operation may not be obtained.

Note 3: j = 3, 4

Table 9-6 Source Clock for 16-Bit Timer Mode

Source Clock			Resolution		Repeated Cycle	
NORMAL1/2, IDLE1/2 mode		SLOW1/2, SLEEP1/2 mode	fc = 16 MHz	fs = 32.768 kHz	fc = 16 MHz	fs = 32.768 kHz
DV7CK = 0	DV7CK = 1					
$fc/2^{11}$	$fs/2^3$	$fs/2^3$	128 µs	244.14 µs	8.39 s	16 s
$fc/2^7$	$fc/2^7$	–	8 µs	–	524.3 ms	–
$fc/2^5$	$fc/2^5$	–	2 µs	–	131.1 ms	–
$fc/2^3$	$fc/2^3$	–	500 ns	–	32.8 ms	–

Example :Setting the timer mode with source clock $fc/2^7$ Hz, and generating an interrupt 300 ms later (fc = 16.0 MHz)

```
LDW   (TTREG3), 927CH    : Sets the timer register (300 ms÷2^7/fc = 927CH).
DI
SET   (EIRH). 1          : Enables INTTC4 interrupt.
EI
LD    (TC3CR), 13H       :Sets the operating cock to fc/2^7, and 16-bit timer mode
                          (lower byte).
LD    (TC4CR), 04H       : Sets the 16-bit timer mode (upper byte).
LD    (TC4CR), 0CH       : Starts the timer.
```

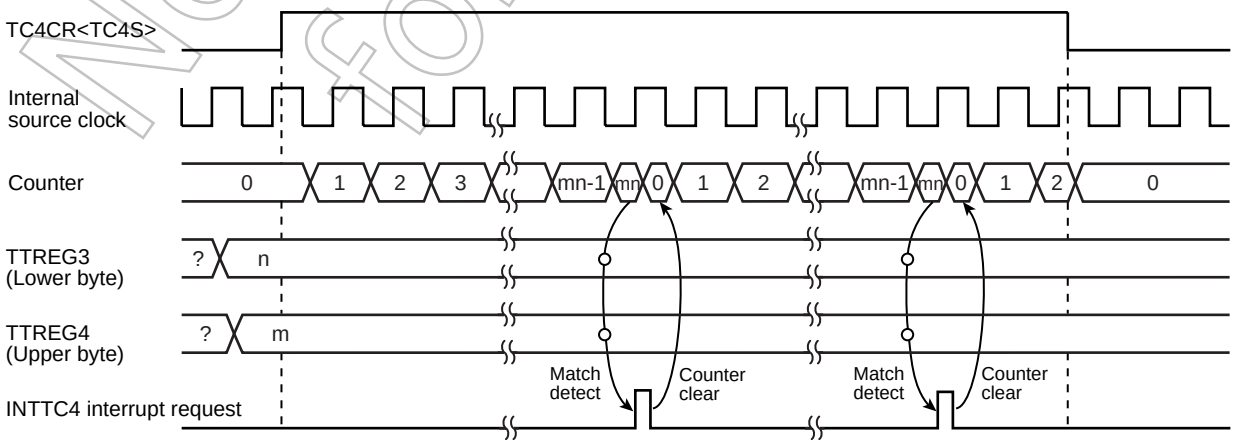

Figure 9-6 16-Bit Timer Mode Timing Chart (TC3 and TC4)

Not Recommended for New Design

9.3.6 16-Bit Event Counter Mode (TC3 and 4)

In the event counter mode, the up-counter counts up at the falling edge to the TC3 pin. The TimerCounter 3 and 4 are cascadable to form a 16-bit event counter.

When a match between the up-counter and the timer register (TTREG3, TTREG4) value is detected after the timer is started by setting TC4CR<TC4S> to 1, an INTTC4 interrupt is generated and the up-counter is cleared.

After being cleared, the up-counter restarts counting at the falling edge of the input pulse to the TC3 pin. Two machine cycles are required for the low- or high-level pulse input to the TC3 pin.

Therefore, a maximum frequency to be supplied is $fc/2^4$ Hz in the NORMAL1 or IDLE1 mode, and $fs/2^4$ in the SLOW1/2 or SLEEP1/2 mode. Program the lower byte (TTREG3), and upper byte (TTREG4) in this order in the timer register. (Programming only the upper or lower byte should not be attempted.)

Note 1: In the event counter mode, fix TCjCR<TFFj> to 0. If not fixed, the $\overline{PDOj}$, $\overline{PWMj}$ and $\overline{PPGj}$ pins may output pulses.
Note 2: In the event counter mode, do not change the TTREGj setting while the timer is running. Since TTREGj is not in the shift register configuration in the event counter mode, the new value programmed in TTREGj is in effect immediately after the programming. Therefore, if TTREGj is changed while the timer is running, an expected operation may not be obtained.
Note 3: j = 3, 4

9.3.7 16-Bit Pulse Width Modulation (PWM) Output Mode (TC3 and 4)

This mode is used to generate a pulse-width modulated (PWM) signals with up to 16 bits of resolution. The TimerCounter 3 and 4 are cascadable to form the 16-bit PWM signal generator.

The counter counts up using the internal clock or external clock.

When a match between the up-counter and the timer register (PWREG3, PWREG4) value is detected, the logic level output from the timer F/F4 is switched to the opposite state. The counter continues counting. The logic level output from the timer F/F4 is switched to the opposite state again by the counter overflow, and the counter is cleared. The INTTC4 interrupt is generated at this time.

Two machine cycles are required for the high- or low-level pulse input to the TC3 pin. Therefore, a maximum frequency to be supplied is $fc/2^4$ Hz in the NORMAL1 or IDLE1 mode, and $fs/2^4$ to in the SLOW1/2 or SLEEP1/2 mode.

Since the initial value can be set to the timer F/F4 by TC4CR<TFF4>, positive and negative pulses can be generated. Upon reset, the timer F/F4 is cleared to 0.

(The logic level output from the $\overline{PWM}$4 pin is the opposite to the timer F/F4 logic level.)

Since PWREG4 and 3 in the PWM mode are serially connected to the shift register, the values set to PWREG4 and 3 can be changed while the timer is running. The values set to PWREG4 and 3 during a run of the timer are shifted by the INTTCj interrupt request and loaded into PWREG4 and 3. While the timer is stopped, the values are shifted immediately after the programming of PWREG4 and 3. Set the lower byte (PWREG3) and upper byte (PWREG3) in this order to program PWREG4 and 3. (Programming only the lower or upper byte of the register should not be attempted.)

If executing the read instruction to PWREG4 and 3 during PWM output, the values set in the shift register is read, but not the values set in PWREG4 and 3. Therefore, after writing to the PWREG4 and 3, reading data of PWREG4 and 3 is previous value until INTTC4 is generated.

For the pin used for PWM output, the output latch of the I/O port must be set to 1.

Note 1: In the PWM mode, program the timer register PWREG4 and 3 immediately after the INTTC4 interrupt request is generated (normally in the INTTC4 interrupt service routine.) If the programming of PWREGj and the interrupt request occur at the same time, an unstable value is shifted, that may result in generation of pulse different from the programmed value until the next INTTC4 interrupt request is generated.
Note 2: When the timer is stopped during PWM output, the $\overline{PWM}$4 pin holds the output status when the timer is stopped. To change the output status, program TC4CR<TFF4> after the timer is stopped. Do not program TC4CR<TFF4> upon stopping of the timer.
Example: Fixing the$\overline{PWM}$4 pin to the high level when the TimerCounter is stopped

Not Recommended for New Design

CLR (TC4CR).3: Stops the timer.
CLR (TC4CR).7 : Sets the $\overline{PWM}$4 pin to the high level.

Note 3: To enter the STOP mode, stop the timer and then enter the STOP mode. If the STOP mode is entered without stopping of the timer when fc, fc/2 or fs is selected as the source clock, a pulse is output from the $\overline{PWM}$4 pin during the warm-up period time after exiting the STOP mode.

Table 9-7 16-Bit PWM Output Mode

Source Clock			Resolution		Repeated Cycle	
NORMAL1/2, IDLE1/2 mode		SLOW1/2, SLEEP1/2 mode	fc = 16 MHz	fs = 32.768 kHz	fc = 16 MHz	fs = 32.768 kHz
DV7CK = 0	DV7CK = 1					
$fc/2^{11}$	$fs/2^3$ [Hz]	$fs/2^3$ [Hz]	128 μs	244.14 μs	8.39 s	16 s
$fc/2^7$	$fc/2^7$	–	8 μs	–	524.3 ms	–
$fc/2^5$	$fc/2^5$	–	2 μs	–	131.1 ms	–
$fc/2^3$	$fc/2^3$	–	500ns	–	32.8 ms	–
fs	fs	fs	30.5 μs	30.5 μs	2 s	2 s
fc/2	fc/2	–	125 ns	–	8.2 ms	–
fc	fc	–	62.5 ns	–	4.1 ms	–

Example :Generating a pulse with 1-ms high-level width and a period of 32.768 ms (fc = 16.0 MHz)

```
                Setting ports
LDW     (PWREG3), 07D0H     : Sets the pulse width.
LD      (TC3CR), 33H        : Sets the operating clock to fc/2^3, and 16-bit PWM output
                              mode (lower byte).
LD      (TC4CR), 056H       : Sets TFF4 to the initial value 0, and 16-bit PWM signal
                              generation mode (upper byte).
LD      (TC4CR), 05EH       : Starts the timer.
```

Not Recommended for New Design

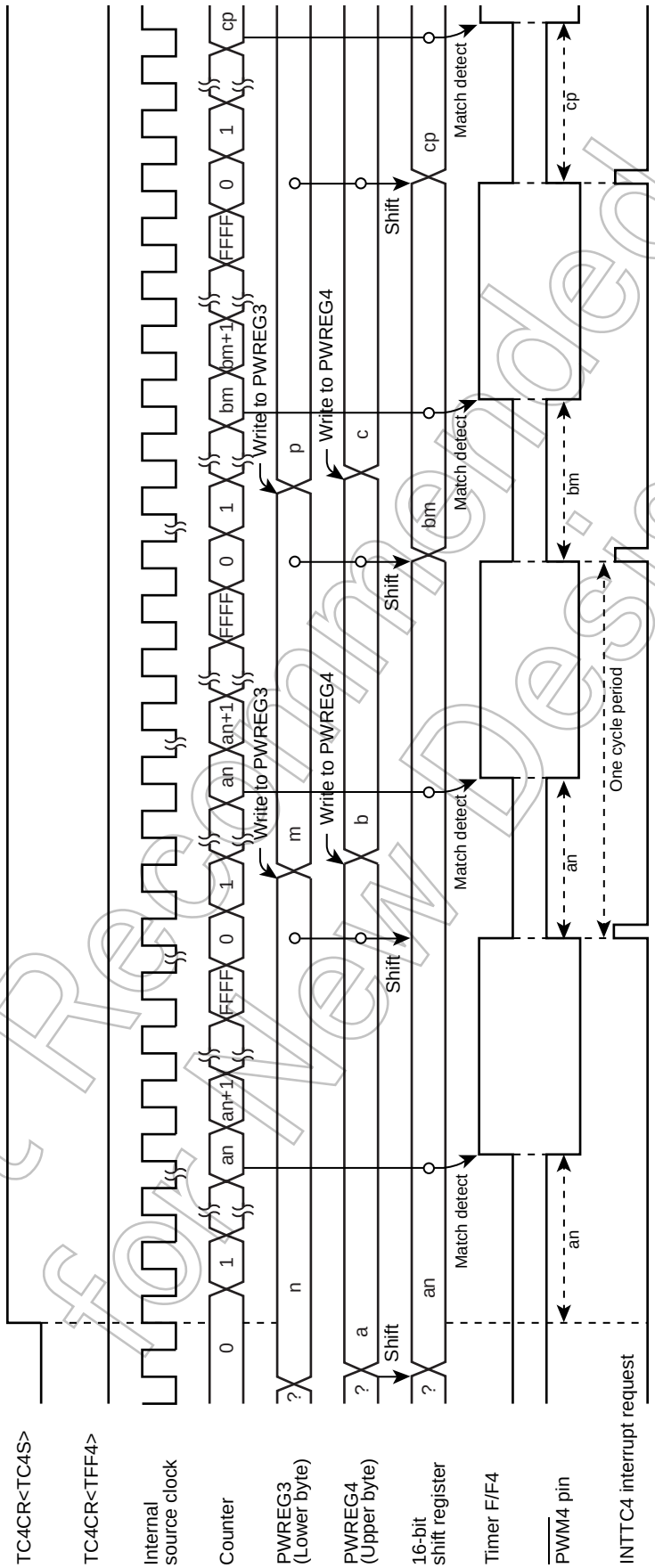

Figure 9-7 16-Bit PWM Mode Timing Chart (TC3 and TC4)

Not Recommended for New Design

9.3.8 16-Bit Programmable Pulse Generate (PPG) Output Mode (TC3 and 4)

This mode is used to generate pulses with up to 16-bits of resolution. The timer counter 3 and 4 are cascadable to enter the 16-bit PPG mode.

The counter counts up using the internal clock or external clock. When a match between the up-counter and the timer register (PWREG3, PWREG4) value is detected, the logic level output from the timer F/F4 is switched to the opposite state. The counter continues counting. The logic level output from the timer F/F4 is switched to the opposite state again when a match between the up-counter and the timer register (TTREG3, TTREG4) value is detected, and the counter is cleared. The INTTC4 interrupt is generated at this time.

Two machine cycles are required for the high- or low-level pulse input to the TC3 pin. Therefore, a maximum frequency to be supplied is $fc/2^4$ Hz in the NORMAL1 or IDLE1 mode, and $fc/2^4$ to in the SLOW1/2 or SLEEP1/2 mode.

Since the initial value can be set to the timer F/F4 by TC4CR<TFF4>, positive and negative pulses can be generated. Upon reset, the timer F/F4 is cleared to 0.

(The logic level output from the $\overline{PPG}$4 pin is the opposite to the timer F/F4.)

Set the lower byte and upper byte in this order to program the timer register. (TTREG3 → TTREG4, PWREG3 → PWREG4) (Programming only the upper or lower byte should not be attempted.)

For PPG output, set the output latch of the I/O port to 1.

Example :Generating a pulse with 1-ms high-level width and a period of 16.385 ms (fc = 16.0 MHz)

```
                Setting ports
LDW     (PWREG3), 07D0H     : Sets the pulse width.
LDW     (TTREG3), 8002H     : Sets the cycle period.
LD      (TC3CR), 33H        : Sets the operating clock to fc/2^3, and16-bit PPG mode
                              (lower byte).
LD      (TC4CR), 057H       : Sets TFF4 to the initial value 0, and 16-bit
                              PPG mode (upper byte).
LD      (TC4CR), 05FH       : Starts the timer.
```

Note 1: In the PPG mode, do not change the PWREGi and TTREGi settings while the timer is running. Since PWREGi and TTREGi are not in the shift register configuration in the PPG mode, the new values programmed in PWREGi and TTREGi are in effect immediately after programming PWREGi and TTREGi. Therefore, if PWREGi and TTREGi are changed while the timer is running, an expected operation may not be obtained.

Note 2: When the timer is stopped during PPG output, the $\overline{PPG}$4 pin holds the output status when the timer is stopped. To change the output status, program TC4CR<TFF4> after the timer is stopped. Do not change TC4CR<TFF4> upon stopping of the timer.

Example: Fixing the $\overline{PPG}$4 pin to the high level when the TimerCounter is stopped

```
CLR  (TC4CR).3: Stops the timer
CLR  (TC4CR).7: Sets the PPG4 pin to the high level
```

Note 3: i = 3, 4

Not Recommended for New Design

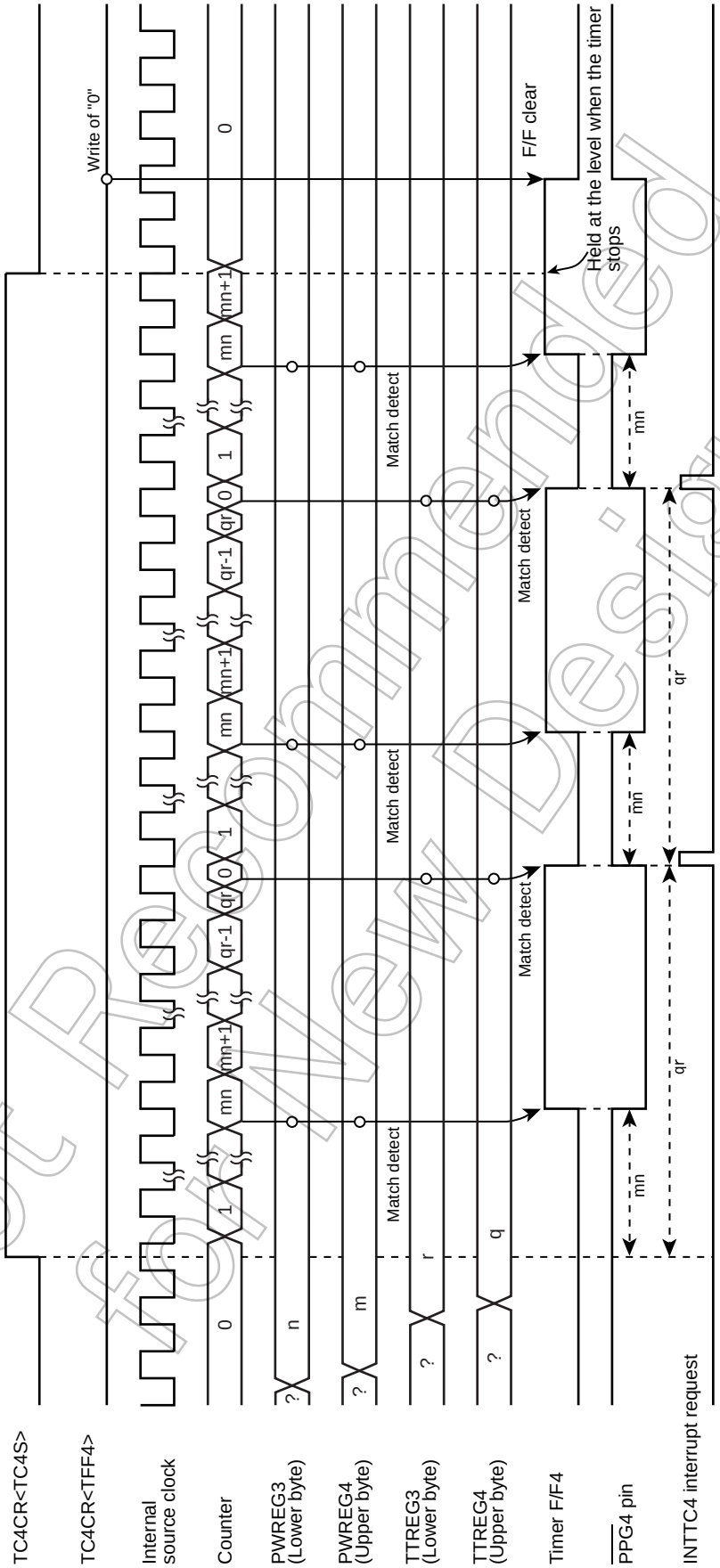

Figure 9-8 16-Bit PPG Mode Timing Chart (TC3 and TC40)

Not Recommended for New Design

9.3.9 Warm-Up Counter Mode

In this mode, the warm-up period time is obtained to assure oscillation stability when the system clocking is switched between the high-frequency and low-frequency. The timer counter 3 and 4 are cascadable to form a 16-bit TimerCouter. The warm-up counter mode has two types of mode; switching from the high-frequency to low-frequency, and vice-versa.

Note 1: In the warm-up counter mode, fix TCiCR<TFFi> to 0. If not fixed, the $\overline{PDOi}$, $\overline{PWMi}$ and $\overline{PPGi}$ pins may output pulses.

Note 2: In the warm-up counter mode, only upper 8 bits of the timer register TTREG4 and 3 are used for match detection and lower 8 bits are not used.

Note 3: i = 3, 4

9.3.9.1 Low-Frequency Warm-up Counter Mode (NORMAL1 → NORMAL2 → SLOW2 → SLOW1)

In this mode, the warm-up period time from a stop of the low-frequency clock fs to oscillation stability is obtained. Before starting the timer, set SYSCR2<XTEN> to 1 to oscillate the low-frequency clock. When a match between the up-counter and the timer register (TTREG4, 3) value is detected after the timer is started by setting TC4CR<TC4S> to 1, the counter is cleared by generating the INTTC4 interrupt request. After stopping the timer in the INTTC4 interrupt service routine, set SYSCR2<SYSCK> to 1 to switch the system clock from the high-frequency to low-frequency, and then clear of SYSCR2<XTEN> to 0 to stop the high-frequency clock.

Table 9-8 Setting Time of Low-Frequency Warm-Up Counter Mode (fs = 32.768 kHz)

Maximum Time Setting (TTREG4, 3 = 0100H)	Maximum Time Setting (TTREG4, 3 = FF00H)
7.81 ms	1.99 s

Example :After checking low-frequency clock oscillation stability with TC4 and 3, switching to the SLOW1 mode

```
            SET     (SYSCR2).6      : SYSCR2<XTEN> ← 1
            LD      (TC3CR), 43H    : Sets TFF3=0, source clock fs, and 16-bit mode.
            LD      (TC4CR), 05H    : Sets TFF4=0, and warm-up counter mode.
            LD      (TTREG3), 8000H : Sets the warm-up time.
                                      (The warm-up time depends on the oscillator characteristic.)
            DI                      : IMF ← 0
            SET     (EIRH). 1       : Enables the INTTC4.
            EI                      : IMF ← 1
            SET     (TC4CR).3       : Starts TC4 and 3.
              :         :
PINTTC4:    CLR     (TC4CR).3       : Stops TC4 and 3.
            SET     (SYSCR2).5      : SYSCR2<SYSCK> ← 1
                                      (Switches the system clock to the low-frequency clock.)
            CLR     (SYSCR2).7      : SYSCR2<XEN> ← 0 (Stops the high-frequency clock.)
            RETI
              :         :
VINTTC4:    DW      PINTTC4         : INTTC4 vector table
```

Not Recommended for New Design

9.3.9.2 High-Frequency Warm-Up Counter Mode (SLOW1 → SLOW2 → NORMAL2 → NORMAL1)

In this mode, the warm-up period time from a stop of the high-frequency clock fc to the oscillation stability is obtained. Before starting the timer, set SYSCR2<XEN> to 1 to oscillate the high-frequency clock. When a match between the up-counter and the timer register (TTREG4, 3) value is detected after the timer is started by setting TC4CR<TC4S> to 1, the counter is cleared by generating the INTTC4 interrupt request. After stopping the timer in the INTTC4 interrupt service routine, clear SYSCR2<SYSCK> to 0 to switch the system clock from the low-frequency to high-frequency, and then SYSCR2<XTEN> to 0 to stop the low-frequency clock.

Table 9-9 Setting Time in High-Frequency Warm-Up Counter Mode

Minimum time (TTREG4, 3 = 0100H)	Maximum time (TTREG4, 3 = FF00H)
16 μs	4.08 ms

Example :After checking high-frequency clock oscillation stability with TC4 and 3, switching to the NORMAL1 mode

```
            SET     (SYSCR2).7          : SYSCR2<XEN> ← 1
            LD      (TC3CR), 63H        : Sets TFF3=0, source clock fs, and 16-bit mode.
            LD      (TC4CR), 05H        : Sets TFF4=0, and warm-up counter mode.
            LD      (TTREG3), 0F800H    : Sets the warm-up time.
                                          (The warm-up time depends on the oscillator characteristic.)
            DI                          : IMF ← 0
            SET     (EIRH). 1           : Enables the INTTC4.
            EI                          : IMF ← 1
            SET     (TC4CR).3           : Starts the TC4 and 3.
              :       :
PINTTC4:    CLR     (TC4CR).3           : Stops the TC4 and 3.
            CLR     (SYSCR2).5          : SYSCR2<SYSCK> ← 0
                                          (Switches the system clock to the high-frequency clock.)
            CLR     (SYSCR2).6          : SYSCR2<XTEN> ← 0
                                          (Stops the low-frequency clock.)
            RETI
              :       :
VINTTC4:    DW      PINTTC4             : INTTC4 vector table
```

Not Recommended for New Design

10. Synchronous Serial Interface (SIO)

The serial interfaces connect to an external device via SI, SO, and $\overline{SCK}$ pins.

When these pins are used as serial interface, the output latches for each port should be set to "1".

10.1 Configuration

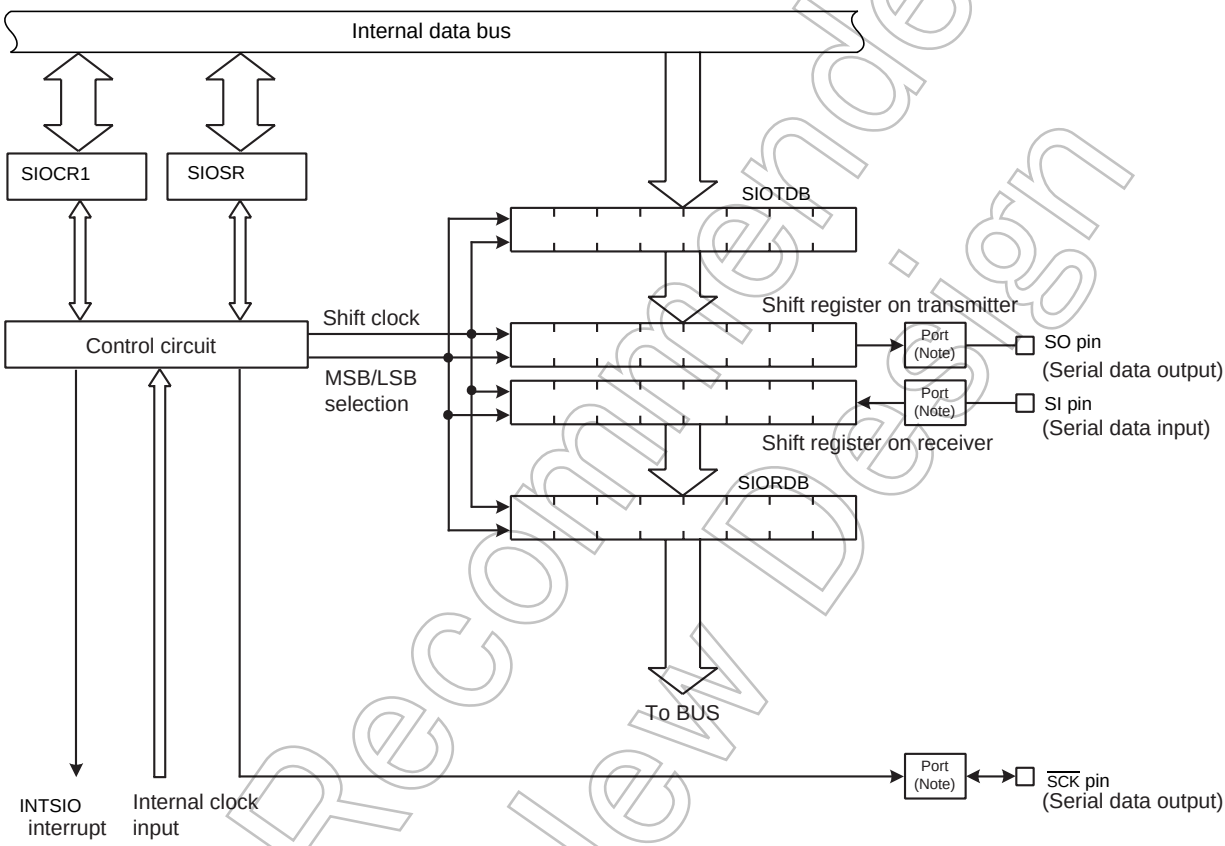

Note: Set the register of port correctly for the port assigned as serial interface pins.
For details, see the description of the input/output port control register.

Figure 10-1 Synchronous Serial Interface (SIO)

Not Recommended for New Design

10.2 Control

The SIO is controlled using the serial interface control register (SIOCR1). The operating status of the serial interface can be inspected by reading the status register (SIOCR1).

Serial Interface Control Register

SIOCR1 (0026H)

7	6	5	4	3	2	1	0
SIOS	SIOINH	SIOM		SIODIR	SCK		

(Initial value: 0000 0000)

SIOS	Specify start/stop of transfer	0: Stop 1: Start				R/W
SIOINH	Forcibly stops transfer (Note 1)	0: – 1: Forcibly stop (Automatically cleared to "0" after stopping)				
SIOM	Selects transfer mode	00: Transmit mode 01: Receive mode 10: Transmit/receive mode 11: Reserved				
SIODIR	Selects direction of transfer	0: MSB (Transfer beginning with bit7) 1: LSB (Transfer beginning with bit0)				
SCK	Selects serial clock		NORMAL1/2 or IDLE1/2 modes		SLOW/SLEEP mode	
			TBTCR <DV7CK> = "0"	TBTCR <DV7CK> = "1"		
		000	$fc/2^{12}$	$fs/2^4$	$fs/2^4$	
		001	$fc/2^8$	$fc/2^8$	Reserved	
		010	$fc/2^7$	$fc/2^7$	Reserved	
		011	$fc/2^6$	$fc/2^6$	Reserved	
		100	$fc/2^5$	$fc/2^5$	Reserved	
		101	$fc/2^4$	$fc/2^4$	Reserved	
		110	$fc/2^3$	$fc/2^3$	Reserved	
		111	External clock (Input from $\overline{SCK}$ pin)			

Note 1: When SIOCR1<SIOINH> is set to “1”, SIOCR1<SIOS>, SIOSR register, SIORDB register and SIOTDB register are initialized.

Note 2: Transfer mode, direction of transfer and serial clock must be select during the transfer is stopping (when SIOSR<SIOF> "0").

Note 3: fc: High-frequency clock [Hz], fs: Low-frequency clock [Hz], *: Don’t care

Not Recommended for New Design

Serial Interface Status Register

SIOSR (0027H)	7	6	5	4	3	2	1	0	
	SIOF	SEF	TXF	RXF	TXERR	RXERR			(Initial value: 0010 00**)

SIOF	Serial transfer operation status monitor	0: Transfer finished 1: Transfer in progress	Read only
SEF	Number of clocks monitor	0: 8 clocks 1: 1 to 7 clocks	
TXF	Transmit buffer empty flag	0: Data exists in transmit buffer 1: No data exists in transmit buffer	
RXF	Receive buffer full flag	0: No data exists in receive buffer 1: Data exists in receive buffer	
TXERR	Transfer operation error flag	Read 0: – (No error exist) 1: Transmit buffer under run occurs in an external clock mode Write 0: Clear the flag 1: – (A write of "1" to this bit is ignored)	R/W
RXERR	Receive operation error flag	Read 0: – (No error exist) 1: Receive buffer over run occurs in an external clock mode Write 0: Clear the flag 1: – (A write of "1" to this bit is ignored)	

Note 1: The operation error flag (TXERR and RXERR) are not automatically cleared by stopping transfer with SIOCR1<SIOS> "0". Therefore, set these bits to "0" for clearing these error flag. Or set SIOCR1<SIOINH> to "1".

Note 2: *: Don't care

Receive buffer register

SIORDB (0028H)	7	6	5	4	3	2	1	0	Read only
									(Initial value: 0000 0000)

Transmit buffer register

SIOTDB (0028H)	7	6	5	4	3	2	1	0	Write only
									(Initial value: **** ****)

Note 1: SIOTDB is write only register. A bit manipulation should not be performed on the transmit buffer register using a read-modify-write instruction.

Note 2: The SIOTDB should be written after checking SIOSR<TXF> "1". When SIOSR<TXF> is "0", the writing data can't be transferred to SIOTDB even if write instruction is executed to SIOTDB

Note 3: *: Don't care

Not Recommended for New Design

10.3 Function

10.3.1 Serial clock

10.3.1.1 Clock source

The serial clock can be selected by using SIOCR1<SCK>. When the serial clock is changed, the writing instruction to SIOCR1<SCK> should be executed while the transfer is stopped (when SIOSR<SIOF> “0”)

(1) Internal clock

Setting the SIOCR1<SCK> to other than “111B” outputs the clock (shown in " Table 10-1 Serial Clock Rate (fc = 16 MHz, fs = 32.768kHz) ") as serial clock outputs from $\overline{SCK}$ pin. At the before beginning or finishing of a transfer, $\overline{SCK}$ pin is kept in high level.

When writing (in the transmit mode) or reading (in the receive mode) data can not follow the serial clock rate, an automatic-wait function is executed to stop the serial clock automatically and hold the next shift operation until reading or writing is completed (shown in " Figure 10-2 Automatic-wait Function (Example of transmit mode) "). The maximum time from releasing the automatic-wait function by reading or writing a data is 1 cycle of the selected serial clock until the serial clock comes out from $\overline{SCK}$ pin.

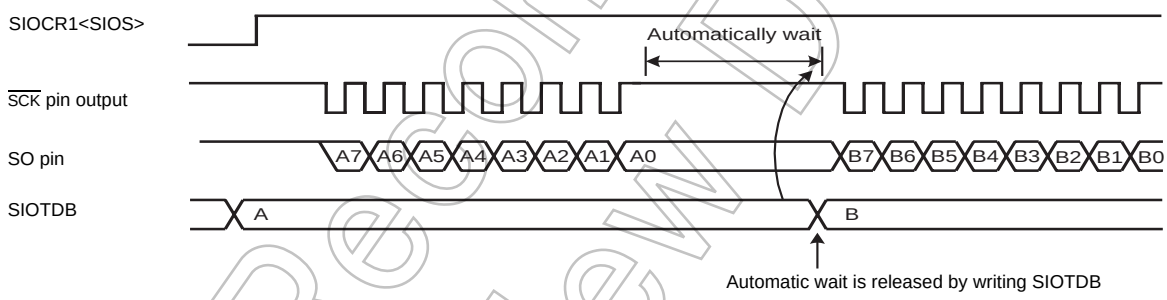

Figure 10-2 Automatic-wait Function (Example of transmit mode)

Table 10-1 Serial Clock Rate (fc = 16 MHz, fs = 32.768kHz)

	NORMAL1/2, IDLE1/2 Mode				SLOW1/2, SLEEP1/2 Mode	
	TBTCR<DV7CK> = "0"		TBTCR<DV7CK> = "1"		Serial Clock	Baud Rate
SCK	Serial Clock	Baud Rate	Serial Clock	Baud Rate		
000	$fc/2^{12}$	3.906 kbps	$fs/2^4$	2048 bps	$fs/2^4$	2048 bps
001	$fc/2^8$	62.5 kbps	$fc/2^8$	62.5 kbps	Reserved	–
010	$fc/2^7$	125 kbps	$fc/2^7$	125 kbps	Reserved	–
011	$fc/2^6$	250 kbps	$fc/2^6$	250 kbps	Reserved	–
100	$fc/2^5$	500 kbps	$fc/2^5$	500 kbps	Reserved	–
101	$fc/2^4$	1.00 Mbps	$fc/2^4$	1.00 Mbps	Reserved	–
110	$fc/2^3$	2.00 Mbps	$fc/2^3$	2.00 Mbps	Reserved	

Not Recommended for New Design

(2) External clock

When an external clock is selected by setting SIOCR1<SCK> to “111B”, the clock via the $\overline{\text{SCK}}$ pin from an external source is used as the serial clock.

To ensure shift operation, the serial clock pulse width must be 4/fc or more for both “H” and “L” levels.

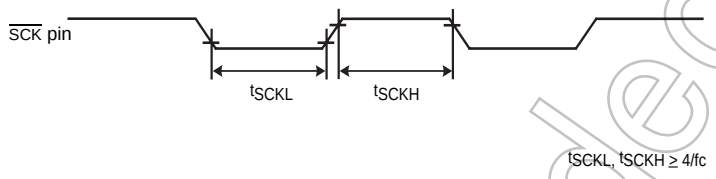

Figure 10-3 External Clock

10.3.1.2 Shift edge

The leading edge is used to transmit data, and the trailing edge is used to receive data.

(1) Leading edge shift

Data is shifted on the leading edge of the serial clock (falling edge of the $\overline{\text{SCK}}$ pin input/output).

(2) Trailing edge shift

Data is shifted on the trailing edge of the serial clock (rising edge of the $\overline{\text{SCK}}$ pin input/output).

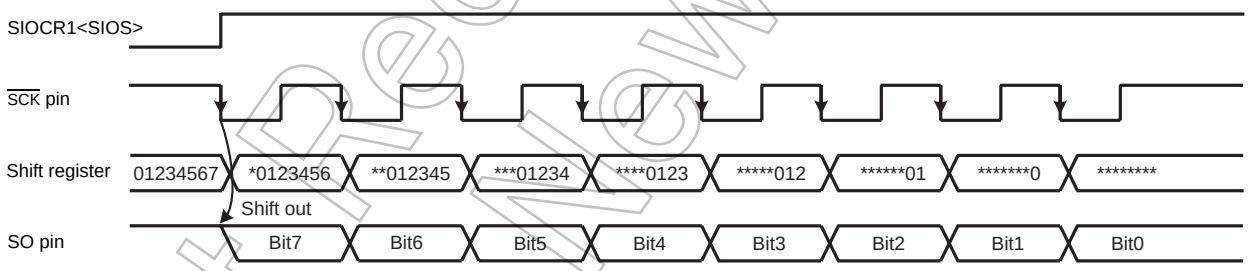

(a) Leading edge shift (Example of MSB transfer)

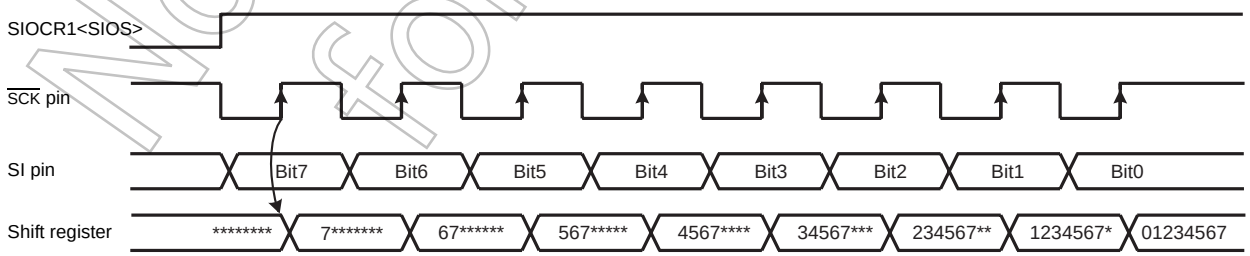

(b) Trailing edge shift (Example of MSB transfer)

Figure 10-4 Shift Edge

Not Recommended for New Design

10.3.2 Transfer bit direction

Transfer data direction can be selected by using SIOCR1<SIODIR>. The transfer data direction can't be set individually for transmit and receive operations.

When the data direction is changed, the writing instruction to SIOCR1<SIODIR> should be executed while the transfer is stopped (when SIOCR1<SIOF>= “0”)

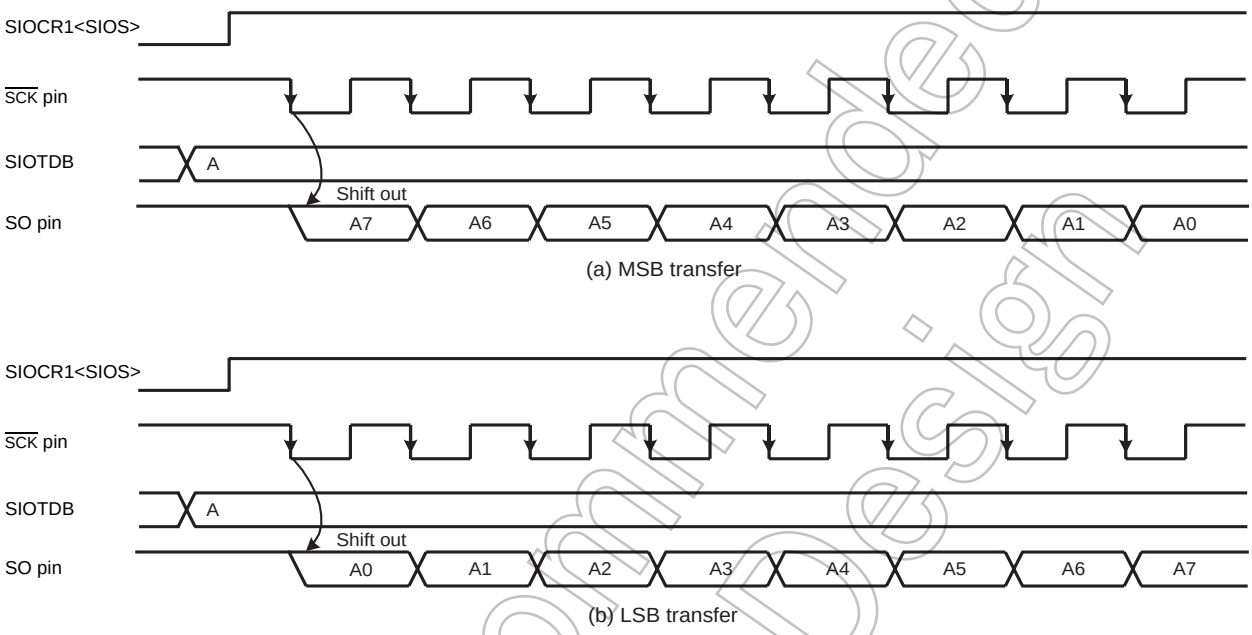

Figure 10-5 Transfer Bit Direction (Example of transmit mode)

10.3.2.1 Transmit mode

(1) MSB transmit mode

MSB transmit mode is selected by setting SIOCR1<SIODIR> to “0”, in which case the data is transferred sequentially beginning with the most significant bit (Bit7).

(2) LSB transmit mode

LSB transmit mode is selected by setting SIOCR1<SIODIR> to “1”, in which case the data is transferred sequentially beginning with the least significant bit (Bit0).

10.3.2.2 Receive mode

(1) MSB receive mode

MSB receive mode is selected by setting SIOCR1<SIODIR> to “0”, in which case the data is received sequentially beginning with the most significant bit (Bit7).

Not Recommended for New Design

(2) LSB receive mode

LSB receive mode is selected by setting SIOCR1<SIODIR> to “1”, in which case the data is received sequentially beginning with the least significant bit (Bit0).

10.3.2.3 Transmit/receive mode

(1) MSB transmit/receive mode

MSB transmit/receive mode are selected by setting SIOCR1<SIODIR> to “0” in which case the data is transferred sequentially beginning with the most significant bit (Bit7) and the data is received sequentially beginning with the most significant (Bit7).

(2) LSB transmit/receive mode

LSB transmit/receive mode are selected by setting SIOCR1<SIODIR> to “1”, in which case the data is transferred sequentially beginning with the least significant bit (Bit0) and the data is received sequentially beginning with the least significant (Bit0).

10.3.3 Transfer modes

Transmit, receive and transmit/receive mode are selected by using SIOCR1<SIOM>.

10.3.3.1 Transmit mode

Transmit mode is selected by writing “00B” to SIOCR1<SIOM>.

(1) Starting the transmit operation

Transmit mode is selected by setting “00B” to SIOCR1<SIOM>. Serial clock is selected by using SIOCR1<SCK>. Transfer direction is selected by using SIOCR1<SIODIR>.

When a transmit data is written to the transmit buffer register (SIOTDB), SIOSR<TXF> is cleared to “0”.

After SIOCR1<SIOS> is set to “1”, SIOSR<SIOF> is set synchronously to “1” the falling edge of $\overline{\text{SCK}}$ pin.

The data is transferred sequentially starting from SO pin with the direction of the bit specified by SIOCR1<SIODIR>, synchronizing with the $\overline{\text{SCK}}$ pin's falling edge.

SIOSR<SEF> is kept in high level, between the first clock falling edge of $\overline{\text{SCK}}$ pin and eighth clock falling edge.

SIOSR<TXF> is set to “1” at the rising edge of pin after the data written to the SIOTDB is transferred to shift register, then the INTSIO interrupt request is generated, synchronizing with the next falling edge on $\overline{\text{SCK}}$ pin.

Note 1: In internal clock operation, when SIOCR1<SIOS> is set to "1", transfer mode does not start without writing a transmit data to the transmit buffer register (SIOTDB).

Note 2: In internal clock operation, when the SIOCR1<SIOS> is set to "1", SIOTDB is transferred to shift register after maximum 1-cycle of serial clock frequency, then a serial clock is output from $\overline{\text{SCK}}$ pin.

Note 3: In external clock operation, when the falling edge is input from $\overline{\text{SCK}}$ pin after SIOCR1<SIOS> is set to "1", SIOTDB is transferred to shift register immediately.

Not Recommended for New Design

(2) During the transmit operation

When data is written to SIOTDB, SIOSR<TXF> is cleared to “0”.

In internal clock operation, in case a next transmit data is not written to SIOTDB, the serial clock stops to “H” level by an automatic-wait function when all of the bit set in the SIOTDB has been transmitted. Automatic-wait function is released by writing a transmit data to SIOTDB. Then, transmit operation is restarted after maximum 1-cycle of serial clock.

When the next data is written to the SIOTDB before termination of previous 8-bit data with SIOSR<TXF> “1”, the next data is continuously transferred after transmission of previous data.

In external clock operation, after SIOSR<TXF> is set to “1”, the transmit data must be written to SIOTDB before the shift operation of the next data begins.

If the transmit data is not written to SIOTDB, transmit error occurs immediately after shift operation is started. Then, INTSIO interrupt request is generated after SIOSR<TXERR> is set to “1”.

(3) Stopping the transmit operation

There are two ways for stopping transmits operation.

- The way of clearing SIOCR1<SIOS>.
  When SIOCR1<SIOS> is cleared to “0”, transmit operation is stopped after all transfer of the data is finished. When transmit operation is finished, SIOSR<SIOF> is cleared to “0” and SO pin is kept in high level.
  In external clock operation, SIOCR1<SIOS> must be cleared to “0” before SIOSR<SEF> is set to “1” by beginning next transfer.
- The way of setting SIOCR1<SIOINH>.
  Transmit operation is stopped immediately after SIOCR1<SIOINH> is set to “1”. In this case, SIOCR1<SIOS>, SIOSR register, SIORDB register and SIOTDB register are initialized.

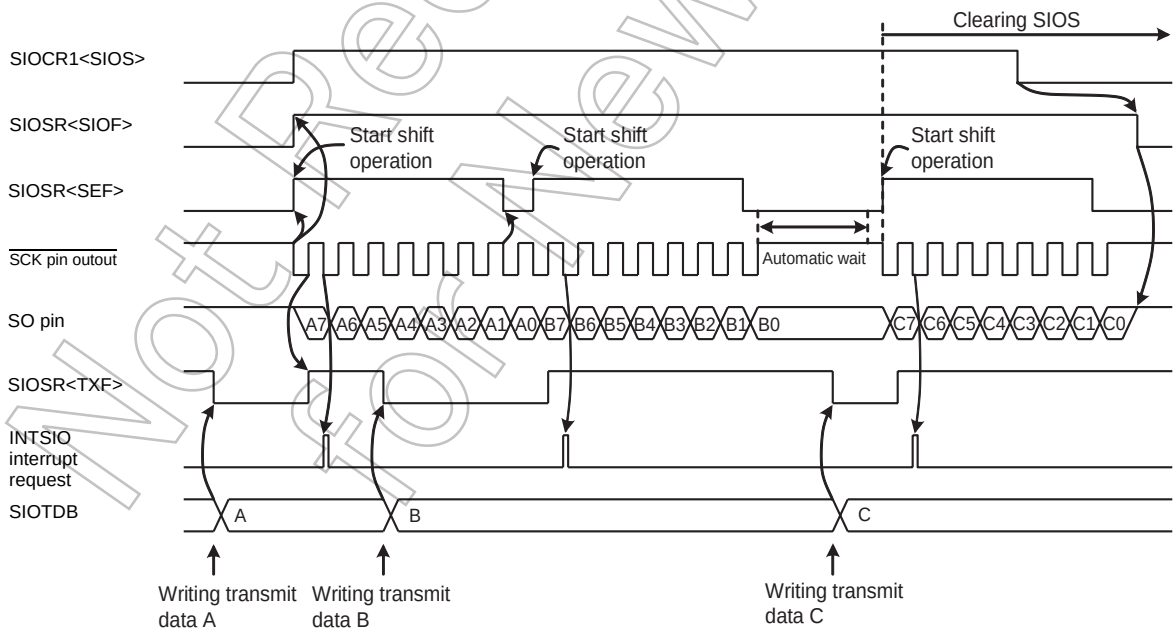

Figure 10-6 Example of Internal Clock and MSB Transmit Mode

Not Recommended for New Design

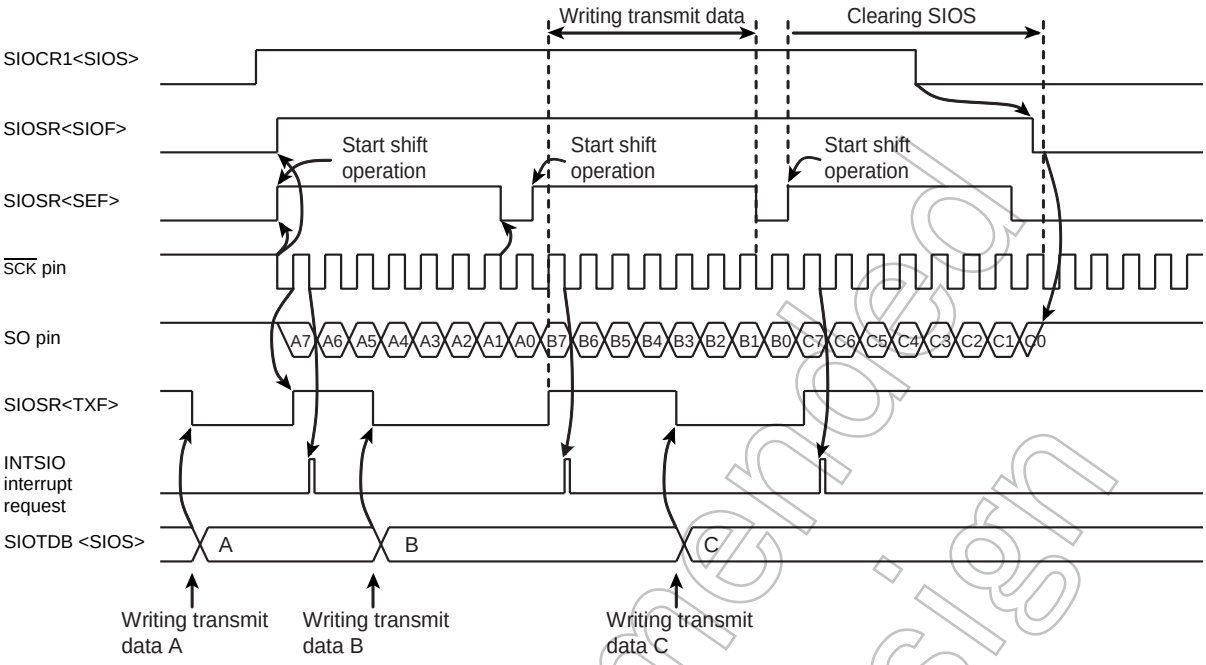

Figure 10-7 Exaple of External Clock and MSB Transmit Mode

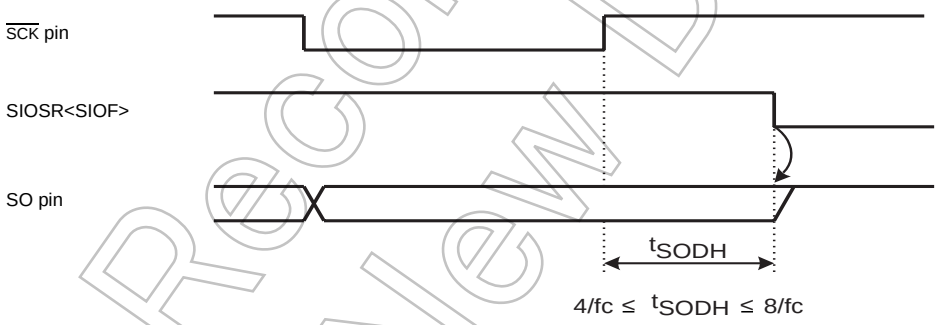

Figure 10-8 Hold Time of the End of Transmit Mode

(4) Transmit error processing

Transmit errors occur on the following situation.

- Shift operation starts before writing next transmit data to SIOTDB in external clock operation.
  If transmit errors occur during transmit operation, SIOSR<TXERR> is set to “1” immediately after starting shift operation. Synchronizing with the next serial clock falling edge, INTSIO interrupt request is generated.
  If shift operation starts before writing data to SIOTDB after SIOCR1<SIOS> is set to “1”, SIOSR<TXERR> is set to “1” immediately after shift operation is started and then INTSIO interrupt request is generated.
  SIO pin is kept in high level when SIOSR<TXERR> is set to “1”. When transmit error occurs, transmit operation must be forcibly stop by writing SIOCR1<SIOINH> to “1”. In this case, SIOCR1<SIOS>, SIOSR register, SIORDB register and SIOTDB register are initialized.

Not Recommended for New Design

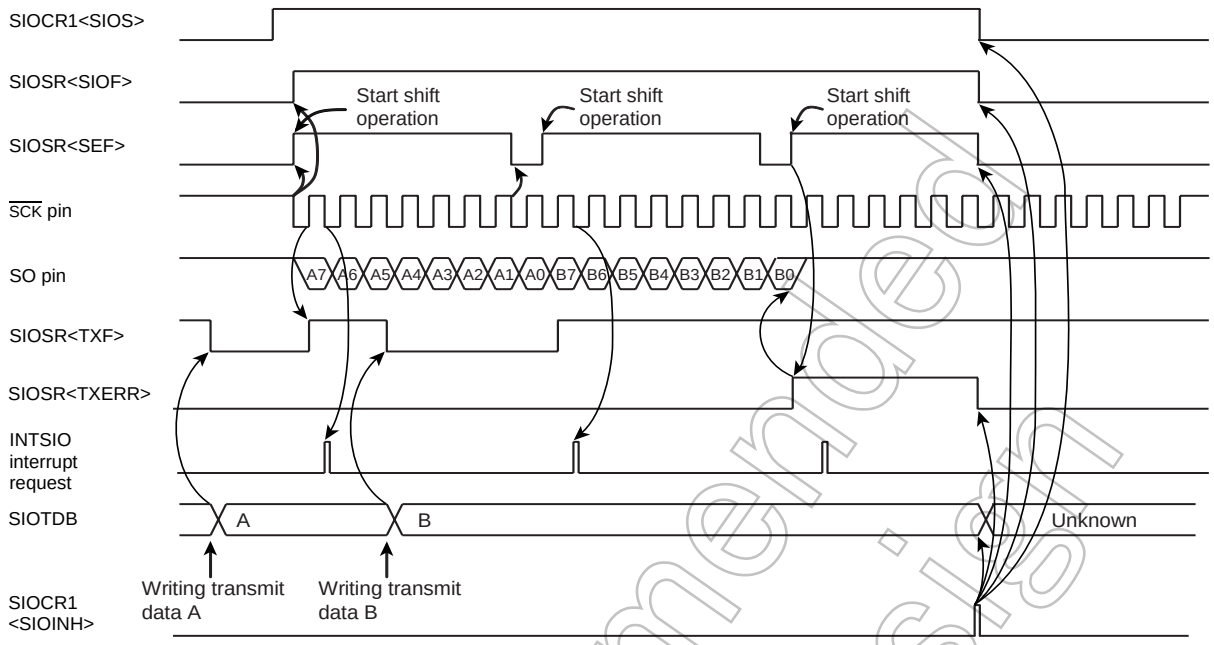

Figure 10-9 Example of Transmit Error Processingme

10.3.3.2 Receive mode

The receive mode is selected by writing “01B” to SIOCR<SIOM>.

(1) Starting the receive operation

Receive mode is selected by setting “01” to SIOCR1<SIOM>. Serial clock is selected by using SIOCR1<SCK>. Transfer direction is selected by using SIOCR1<SIODIR>.

After SIOCR1<SIOS> is set to “1”, SIOSR<SIOF> is set synchronously to “1” the falling edge of $\overline{\text{SCK}}$ pin.

Synchronizing with the $\overline{\text{SCK}}$ pin's rising edge, the data is received sequentially from SI pin with the direction of the bit specified by SBIDIR<SIODIR>.

SIOSR<SEF> is kept in high level, between the first clock falling edge of $\overline{\text{SCK}}$ pin and eighth clock falling edge.

When 8-bit data is received, the data is transferred to SIORDB from shift register. INTSIO interrupt request is generated and SIOSR<RXF> is set to “1”

Note: In internal clock operation, when the SIOCR1<SIOS> is set to "1", the serial clock is generated from $\overline{\text{SCK}}$ pin after maximum 1-cycle of serial clock frequency.

(2) During the receive operation

The SIOSR<RXF> is cleared to “0” by reading a data from SIORDB.

In the internal clock operation, the serial clock stops to “H” level by an automatic-wait function when the all of the 8-bit data has been received. Automatic-wait function is released by reading a received data from SIORDB. Then, receive operation is restarted after maximum 1-cycle of serial clock.

In external clock operation, after SIOSR<RXF> is set to “1”, the received data must be read from SIORDB, before the next data shift-in operation is finished.

Not Recommended for New Design

If received data is not read out from SIORDB receive error occurs immediately after shift operation is finished. Then INTSIO interrupt request is generated after SIOSR<RXERR> is set to “1”.

(3) Stopping the receive operation

There are two ways for stopping the receive operation.

- The way of clearing SIOCR1<SIOS>.
  When SIOCR1<SIOS> is cleared to “0”, receive operation is stopped after all of the data is finished to receive. When receive operation is finished, SIOSR<SIOF> is cleared to “0”.
  In external clock operation, SIOCR1<SIOS> must be cleared to “0” before SIOSR<SEF> is set to “1” by starting the next shift operation.
- The way of setting SIOCR1<SIOINH>.
  Receive operation is stopped immediately after SIOCR1<SIOINH> is set to “1”. In this case, SIOCR1<SIOS>, SIOSR register, SIORDB register and SIOTDB register are initialized.

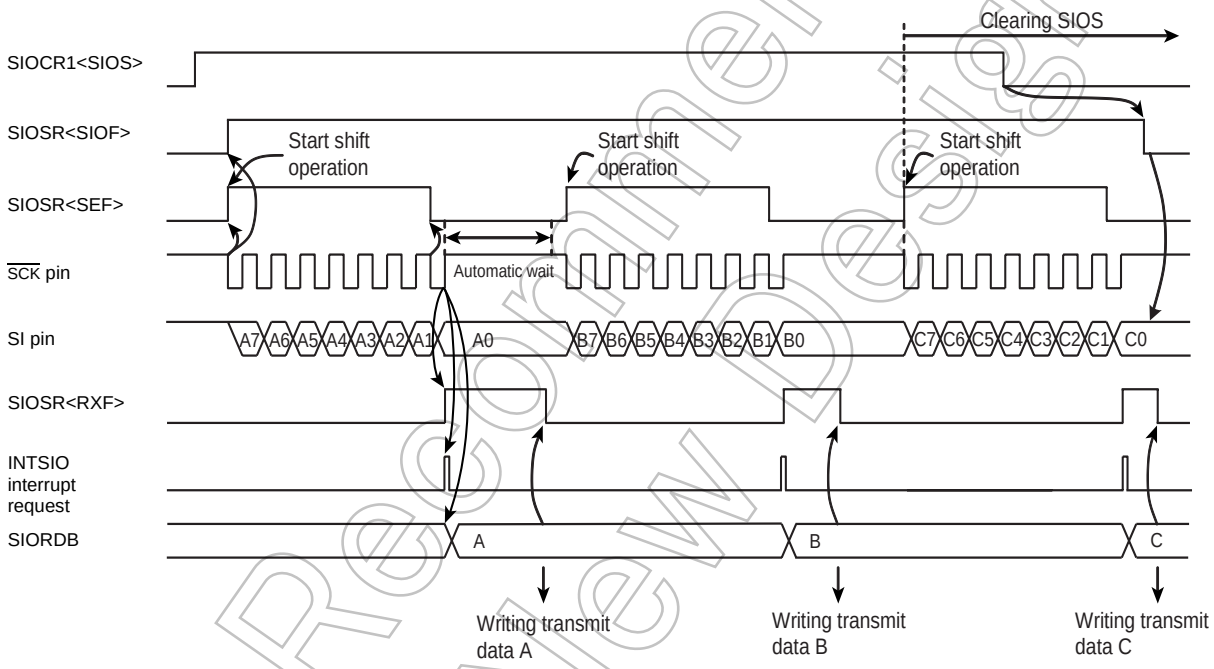

Figure 10-10 Example of Internal Clock and MSB Receive Mode

Not Recommended for New Design

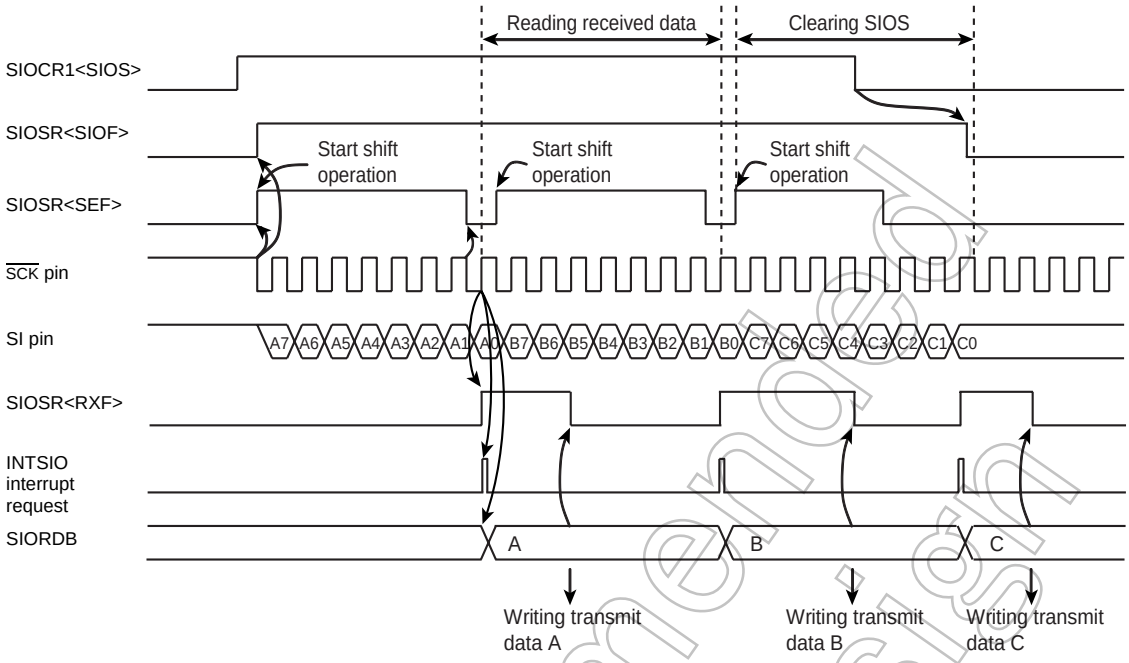

Figure 10-11 Example of External Clock and MSB Receive Mode

(4) Receive error processing

Receive errors occur on the following situation. To protect SIORDB and the shift register contents, the received data is ignored while the SIOSR<RXERR> is “1”.

- Shift operation is finished before reading out received data from SIORDB at SIOSR<RXF> is “1” in an external clock operation.
  If receive error occurs, set the SIOCR1<SIOS> to “0” for reading the data that received immediately before error occurence. And read the data from SIORDB. Data in shift register (at errors occur) can be read by reading the SIORDB again.
  When SIOSR<RXERR> is cleared to “0” after reading the received data, SIOSR<RXF> is cleared to “0”.
  After clearing SIOCR1<SIOS> to “0”, when 8-bit serial clock is input to $\overline{\text{SCK}}$ pin, receive operation is stopped. To restart the receive operation, confirm that SIOSR<SIOF> is cleared to “0”.
  If the receive error occurs, set the SIOCR1<SIOINH> to “1” for stopping the receive operation immediately. In this case, SIOCR1<SIOS>, SIOSR register, SIORDB register and SIOTDB register are initialized.

Not Recommended for New Design

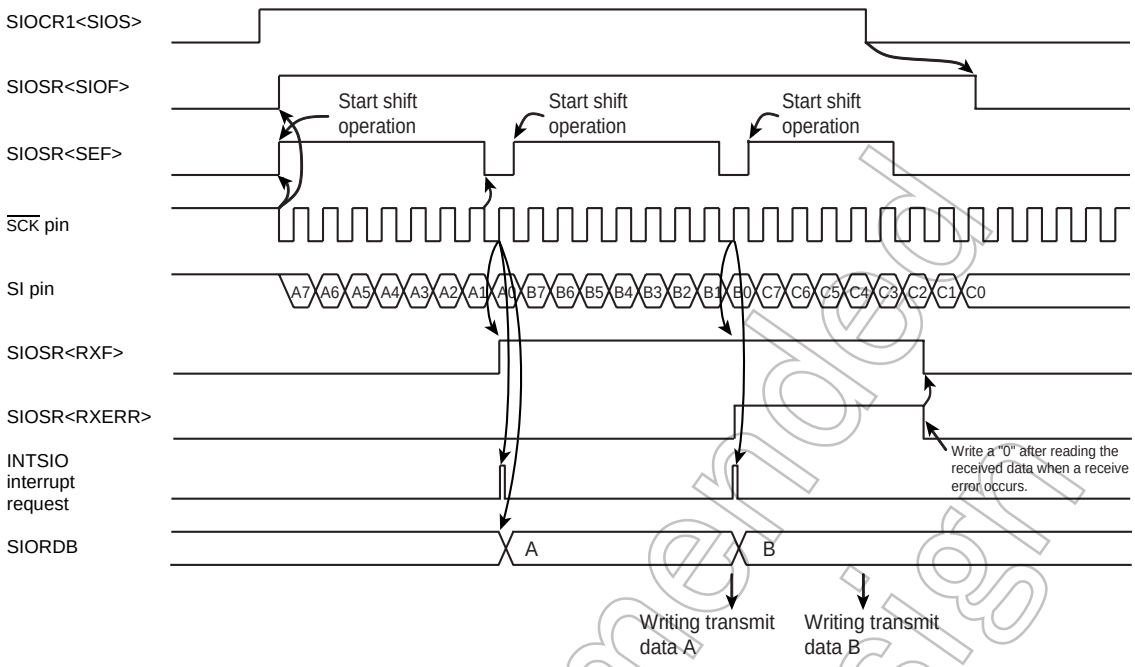

Figure 10-12 Example of Receive Error Processing

Note: If receive error is not corrected, an interrupt request does not generate after the error occurs.

10.3.3.3 Transmit/receive mode

The transmit/receive mode are selected by writing “10” to SIOCR1<SIOM>.

(1) Starting the transmit/receive operation

Transmit/receive mode is selected by writing “10B” to SIOCR1<SIOM>. Serial clock is selected by using SIOCR1<SCK>. Transfer direction is selected by using SIOCR1<SIODIR>.

When a transmit data is written to the transmit buffer register (SIOTDB), SIOSR<TXF> is cleared to “0”.

After SIOCR1<SIOS> is set to “1”, SIOSR<SIOF> is set synchronously to the falling edge of $\overline{\text{SCK}}$ pin.

The data is transferred sequentially starting from SO pin with the direction of the bit specified by SIOCR1<SIODIR>, synchronizing with the $\overline{\text{SCK}}$ pin's falling edge. And receiving operation also starts with the direction of the bit specified by SIOCR1<SIODIR>, synchronizing with the $\overline{\text{SCK}}$ pin's rising edge.

SIOSR<SEF> is kept in high level between the first clock falling edge of $\overline{\text{SCK}}$ pin and eighth clock falling edge.

SIOSR<TXF> is set to “1” at the rising edge of $\overline{\text{SCK}}$ pin after the data written to the SIOTDB is transferred to shift register. When 8-bit data has been received, the received data is transferred to SIORDB from shift register, then the INTSIO interrupt request occurs, synchronizing with setting SIOSR<RXF> to “1”.

Note 1: In internal clock operation, when the SIOCR1<SIOS> is set to "1", SIOTDB is transferred to shift register after maximum 1-cycle of serial clock frequency, then a serial clock is output from $\overline{\text{SCK}}$ pin.

Note 2: In external clock operation, when the falling edge is input from $\overline{\text{SCK}}$ pin after SIOCR1<SIOS> is set to "1", SIOTDB is transferred to shift register immediately. When the rising edge is input from $\overline{\text{SCK}}$ pin, receive operation also starts.

Not Recommended for New Design

(2) During the transmit/receive operation

When data is written to SIOTDB, SIOSR<TXF> is cleared to “0” and when a data is read from SIORDB, SIOSR<RXF> is cleared to “0”.

In internal clock operation, in case of the condition described below, the serial clock stops to “H” level by an automatic-wait function when all of the bit set in the data has been transmitted.

- Next transmit data is not written to SIOTDB after reading a received data from SIORDB.
- Received data is not read from SIORDB after writing a next transmit data to SIOTDB.
- Neither SIOTDB nor SIORDB is accessed after transmission.

The automatic wait function is released by writing the next transmit data to SIOTDB after reading the received data from SIORDB, or reading the received data from SIORDB after writing the next data to SIOTDB.
Then, transmit/receive operation is restarted after maximum 1 cycle of serial clock.
In external clock operation, reading the received data from SIORDB and writing the next data to SIOTDB must be finished before the shift operation of the next data begins.
If the transmit data is not written to SIOTDB after SIOSR<TXF> is set to “1”, transmit error occurs immediately after shift operation is started. When the transmit error occurred, SIOSR<TXERR> is set to “1”.
If received data is not read out from SIORDB before next shift operation starts after setting SIOSR<RXF> to “1”, receive error occurs immediately after shift operation is finished. When the receive error has occurred, SIOSR<RXERR> is set to “1”.

(3) Stopping the transmit/receive operation

There are two ways for stopping the transmit/receive operation.

- The way of clearing SIOCR1<SIOS>.
  When SIOCR1<SIOS> is cleared to “0”, transmit/receive operation is stopped after all transfer of the data is finished. When transmit/receive operation is finished, SIOSR<SIOF> is cleared to “0” and SO pin is kept in high level.
  In external clock operation, SIOCR1<SIOS> must be cleared to “0” before SIOSR<SEF> is set to “1” by beginning next transfer.
- The way of setting SIOCR1<SIOINH>.
  Transmit/receive operation is stopped immediately after SIOCR1<SIOINH> is set to “1”. In this case, SIOCR1<SIOS>, SIOSR register, SIORDB register and SIOTDB register are initialized.

Not Recommended for New Design

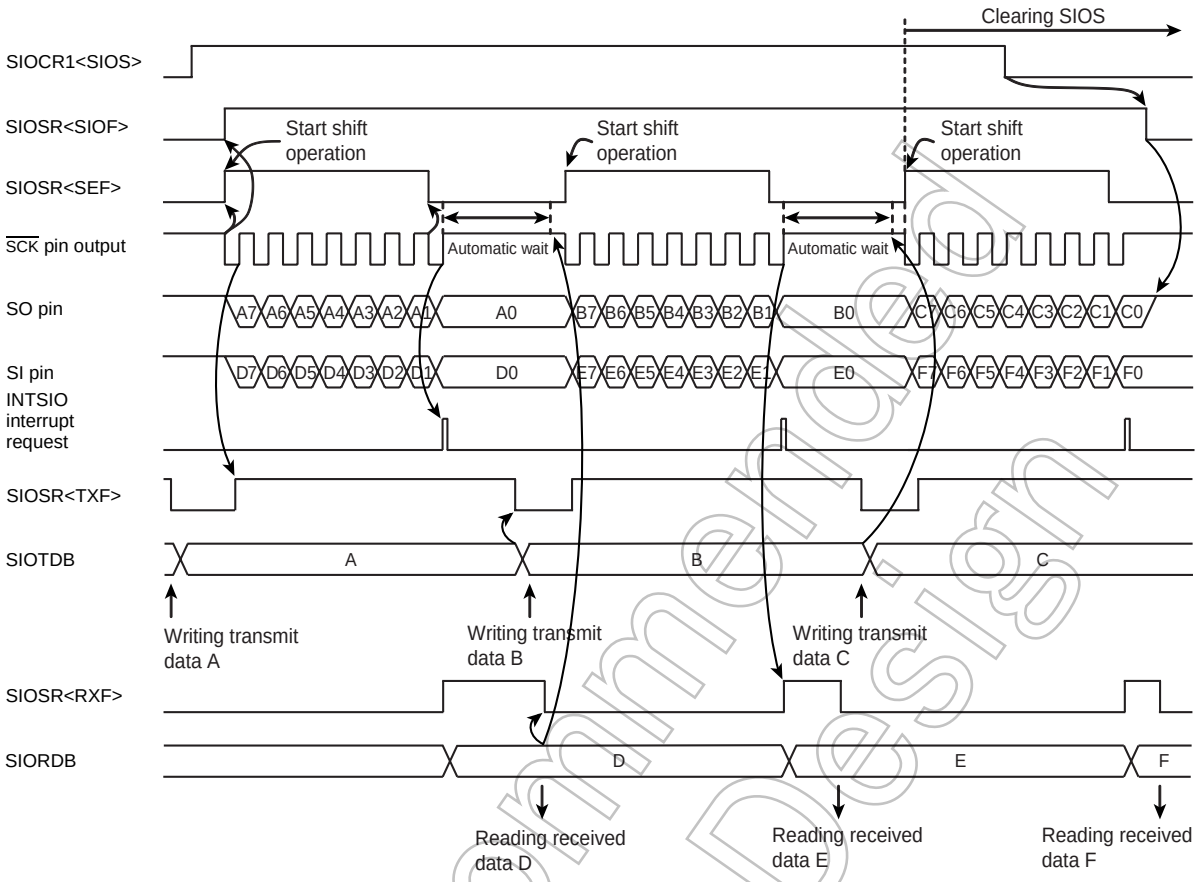

Figure 10-13 Example of Internal Clock and MSB Transmit/Receive Mode

Not Recommended for New Design

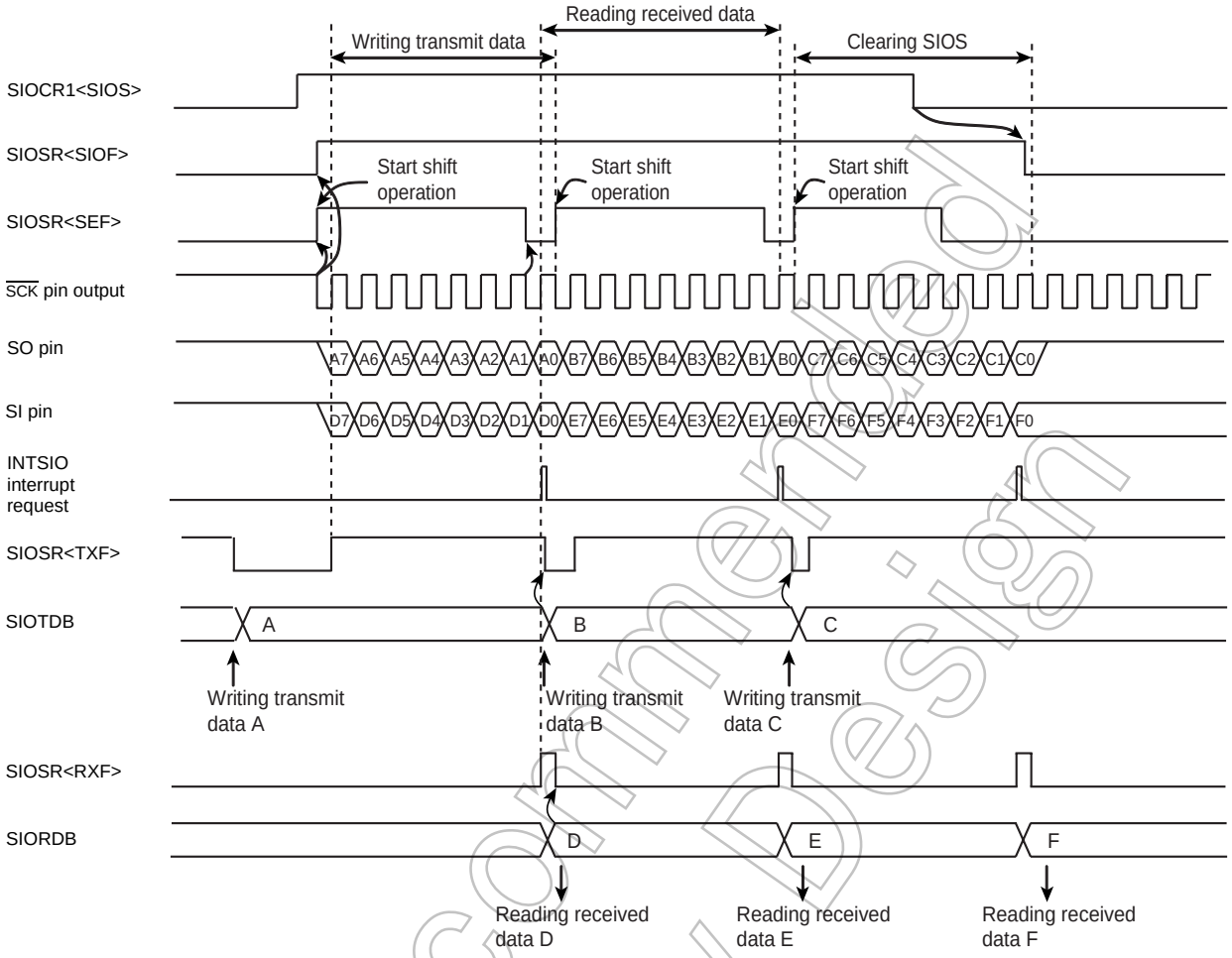

Figure 10-14 Example of External Clock and MSB Transmit/Receive Mode

(4) Transmit/receive error processing

Transmit/receive errors occur on the following situation. Corrective action is different, which errors occur transmits or receives.

(a) Transmit errors

Transmit errors occur on the following situation.

- Shift operation starts before writing next transmit data to SIOTDB in external clock operation.
  If transmit errors occur during transmit operation, SIOSR<TXERR> is set to “1” immediately after starting shift operation. And INTSIO interrupt request is generated after all of the 8-bit data has been received.
  If shift operation starts before writing data to SIOTDB after SIOCR1<SIOS> is set to “1”, SIOSR<TXERR> is set immediately after starting shift operation. And INTSIO interrupt request is generated after all of the 8-bit data has been received.
  SO pin is kept in high level when SIOSR<TXERR> is set to “1”. When transmit error occurs, transmit operation must be forcibly stop by writing SIOCR1<SIOINH> to “1” after the received data is read from SIORDB. In this case, SIOCR1<SIOS>, SIOSR register, SIORDB register and SIOTDB register are initialized.

Not Recommended for New Design

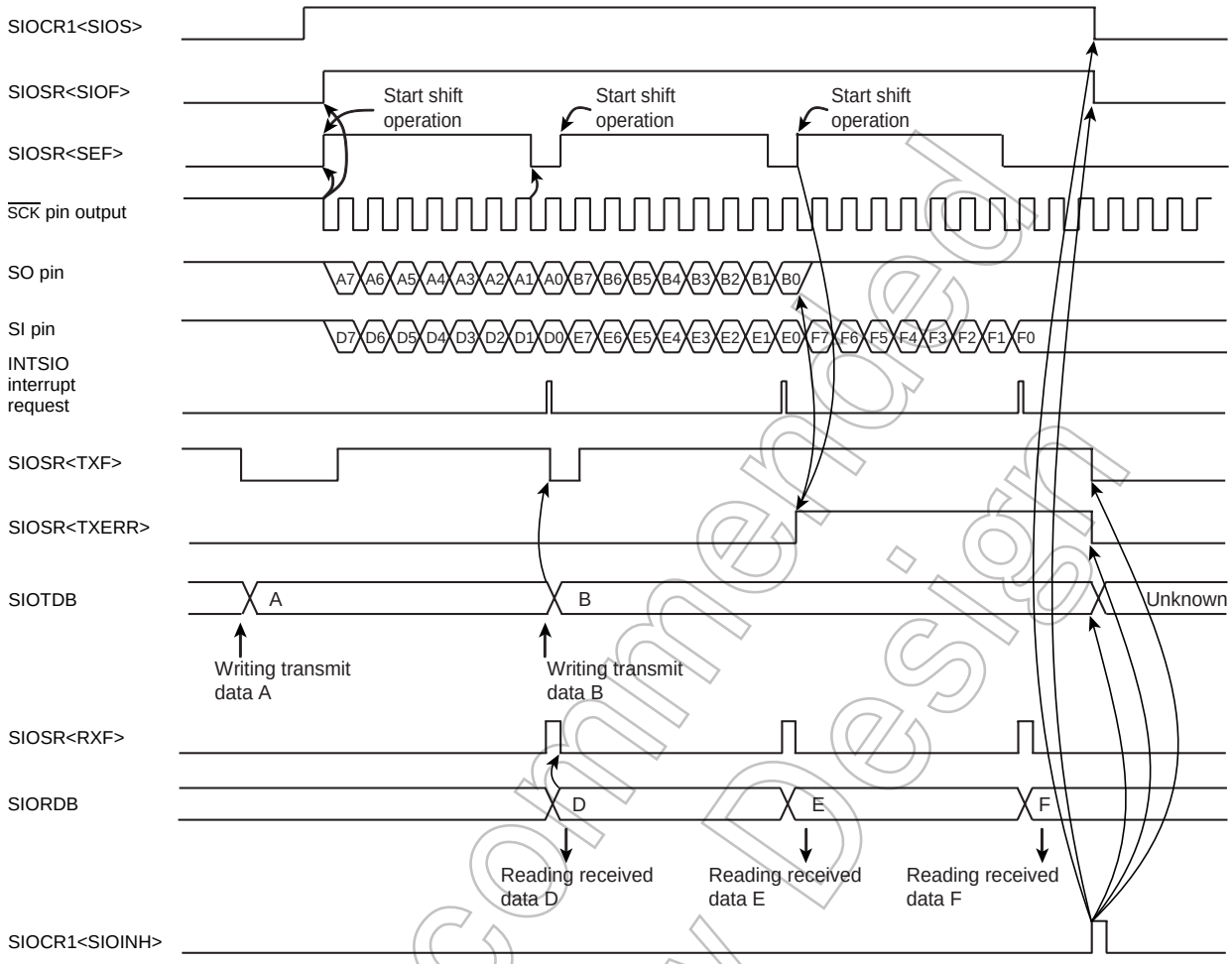

Figure 10-15 Example of Transmit/Receive (Transmit) Error Processing

(b) Receive errors

Receive errors occur on the following situation. To protect SIORDB and the shift register contents, the received data is ignored while the SIOSR<RXERR> is “1”.

- Shift operation is finished before reading out received data from SIORDB at SIOSR<RXF> is “1” in an external clock operation.
  If receive error occurs, set the SIOCR1<SIOS> to “0” for reading the data that received immediately before error occurence. And read the data from SIORDB. Data in shift register (at errors occur) can be read by reading the SIORDB again.
  When SIOSR<RXERR> is cleared to “0” after reading the received data, SIOSR<RXF> is cleared to “0”.
  After clearing SIOCR1<SIOS> to “0”, when 8-bit serial clock is input to $\overline{\text{SCK}}$ pin, receive operation is stopped. To restart the receive operation, confirm that SIOSR<SIOF> is cleared to “0”.
  If the received error occurs, set the SIOCR1<SIOINH> to “1” for stopping the receive operation immediately. In this case, SIOCR1<SIOS>, SIOSR register, SIORDB register and SIOTDB register are initialized.

Not Recommended for New Design

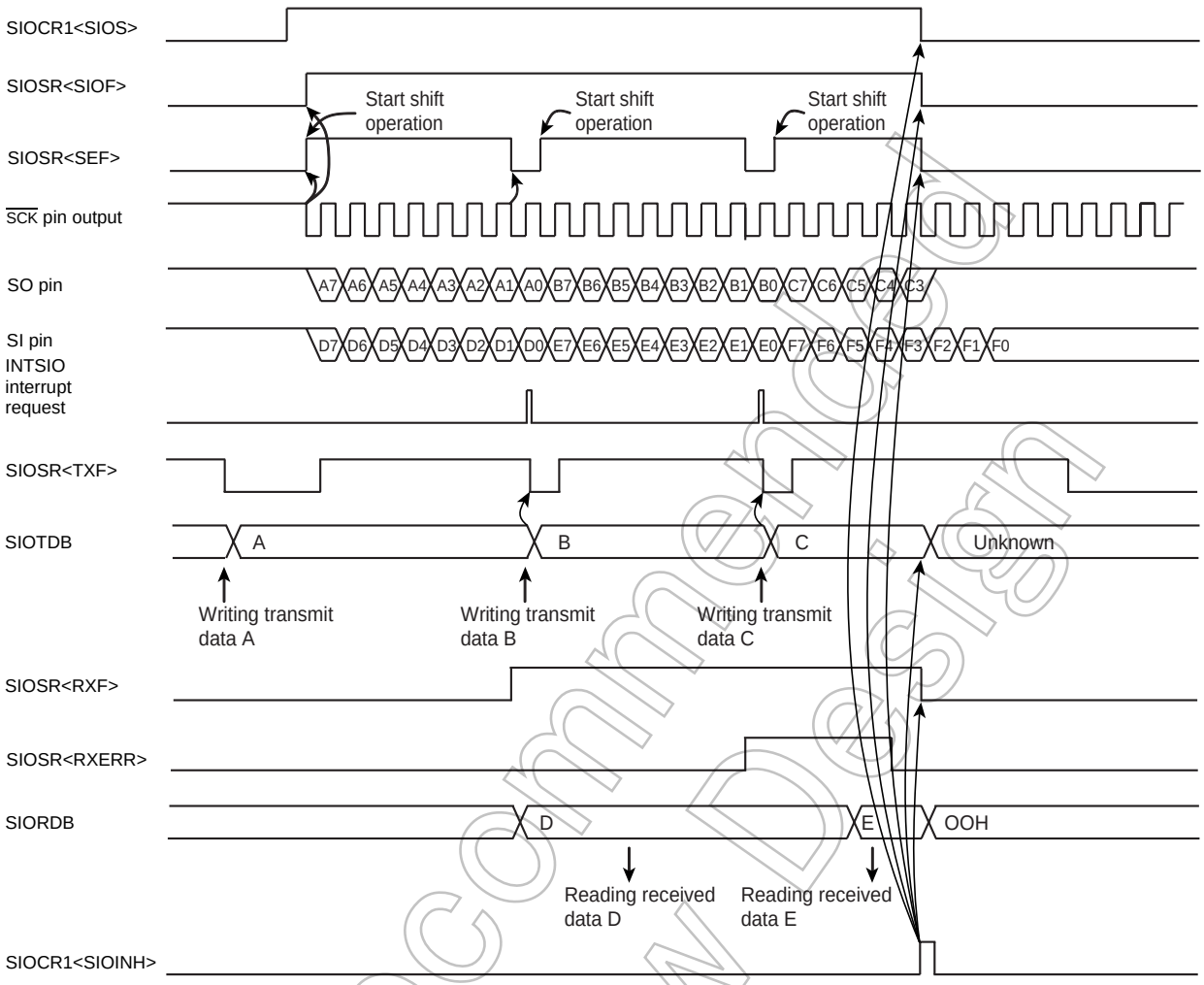

Figure 10-16 Example of Transmit/Receive (Receive) Error Processing

Note: If receive error is not corrected, an interrupt request does not generate after the error occurs.

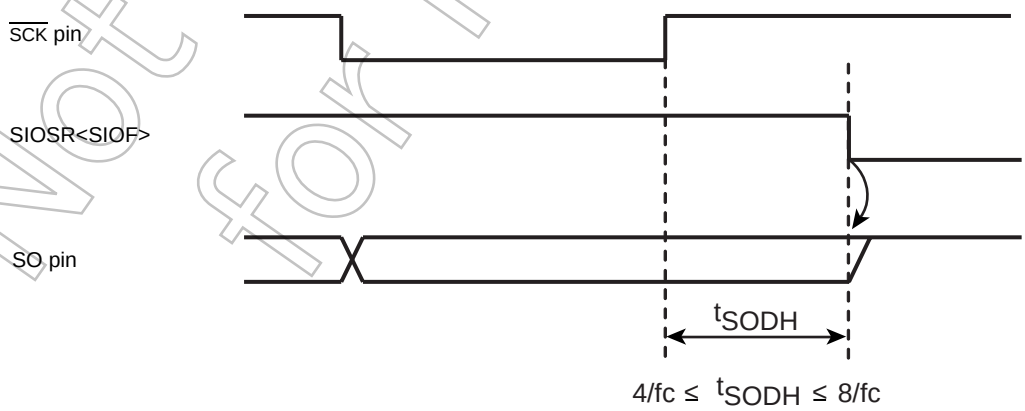

Figure 10-17 Hold Time of the End of Transmit/Receive Mode

Not Recommended for New Design

11. Asynchronous Serial interface (UART)

11.1 Configuration

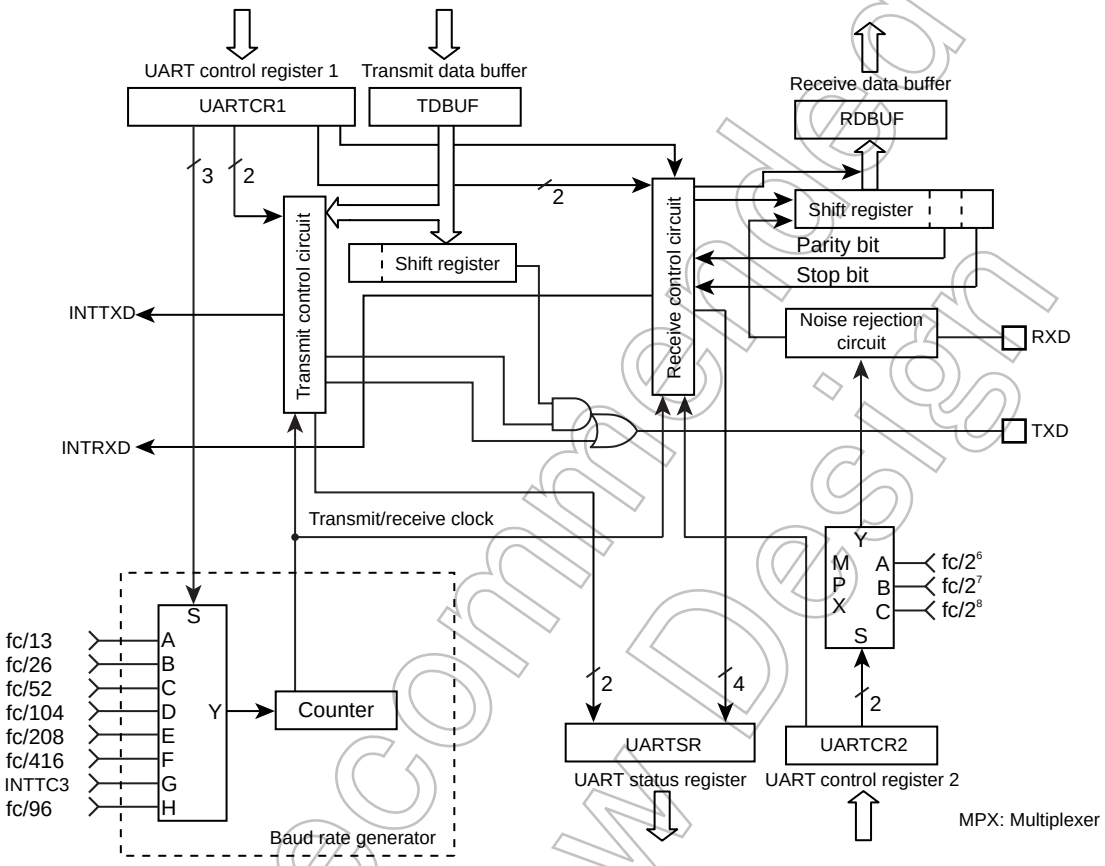

Figure 11-1 UART (Asynchronous Serial Interface)

Not Recommended for New Design

11.2 Control

UART is controlled by the UART Control Registers (UARTCR1, UARTCR2). The operating status can be monitored using the UART status register (UARTSR).

UART Control Register1

UARTCR1 (0020H)	7	6	5	4	3	2	1	0	
	TXE	RXE	STBT	EVEN	PE	BRG			(Initial value: 0000 0000)

TXE	Transfer operation	0: Disable 1: Enable	Write only
RXE	Receive operation	0: Disable 1: Enable	
STBT	Transmit stop bit length	0: 1 bit 1: 2 bits	
EVEN	Even-numbered parity	0: Odd-numbered parity 1: Even-numbered parity	
PE	Parity addition	0: No parity 1: Parity	
BRG	Transmit clock select	000: fc/13 [Hz] 001: fc/26 010: fc/52 011: fc/104 100: fc/208 101: fc/416 110: TC3 (Input INTTC3) 111: fc/96	

Note 1: When operations are disabled by setting TXE and RXE bit to “0”, the setting becomes valid when data transmit or receive complete. When the transmit data is stored in the transmit data buffer, the data are not transmitted. Even if data transmit is enabled, until new data are written to the transmit data buffer, the current data are not transmitted.

Note 2: The transmit clock and the parity are common to transmit and receive.

Note 3: UARTCR1<RXE> and UARTCR1<TXE> should be set to “0” before UARTCR1<BRG> is changed.

UART Control Register2

UARTCR2 (0021H)	7	6	5	4	3	2	1	0	
						RXDNC		STOPBR	(Initial value: **** *000)

RXDNC	Selection of RXD input noise rejectio time	00: No noise rejection (Hysteresis input) 01: Rejects pulses shorter than 31/fc [s] as noise 10: Rejects pulses shorter than 63/fc [s] as noise 11: Rejects pulses shorter than 127/fc [s] as noise	Write only
STOPBR	Receive stop bit length	0: 1 bit 1: 2 bits	

Note: When UARTCR2<RXDNC> = “01”, pulses longer than 96/fc [s] are always regarded as signals; when UARTCR2<RXDNC> = “10”, longer than 192/fc [s]; and when UARTCR2<RXDNC> = “11”, longer than 384/fc [s].

Not Recommended for New Design

UART Status Register

UARTSR (0020H)

7	6	5	4	3	2	1	0
PERR	FERR	OERR	RBFL	TEND	TBEP		

(Initial value: 0000 11**)

PERR	Parity error flag	0: No parity error 1: Parity error	Read only
FERR	Framing error flag	0: No framing error 1: Framing error	
OERR	Overrun error flag	0: No overrun error 1: Overrun error	
RBFL	Receive data buffer full flag	0: Receive data buffer empty 1: Receive data buffer full	
TEND	Transmit end flag	0: On transmitting 1: Transmit end	
TBEP	Transmit data buffer empty flag	0: Transmit data buffer full (Transmit data writing is finished) 1: Transmit data buffer empty	

Note: When an INTTXD is generated, TBEP flag is set to "1" automatically.

UART Receive Data Buffer

RDBUF (0022H)

7	6	5	4	3	2	1	0

Read only

(Initial value: 0000 0000)

UART Transmit Data Buffer

TDBUF (0022H)

7	6	5	4	3	2	1	0

Write only

(Initial value: 0000 0000)

Not Recommended for New Design

11.3 Transfer Data Format

In UART, an one-bit start bit (Low level), stop bit (Bit length selectable at high level, by UARTCR1<STBT>), and parity (Select parity in UARTCR1<PE>; even- or odd-numbered parity by UARTCR1<EVEN>) are added to the transfer data. The transfer data formats are shown as follows.

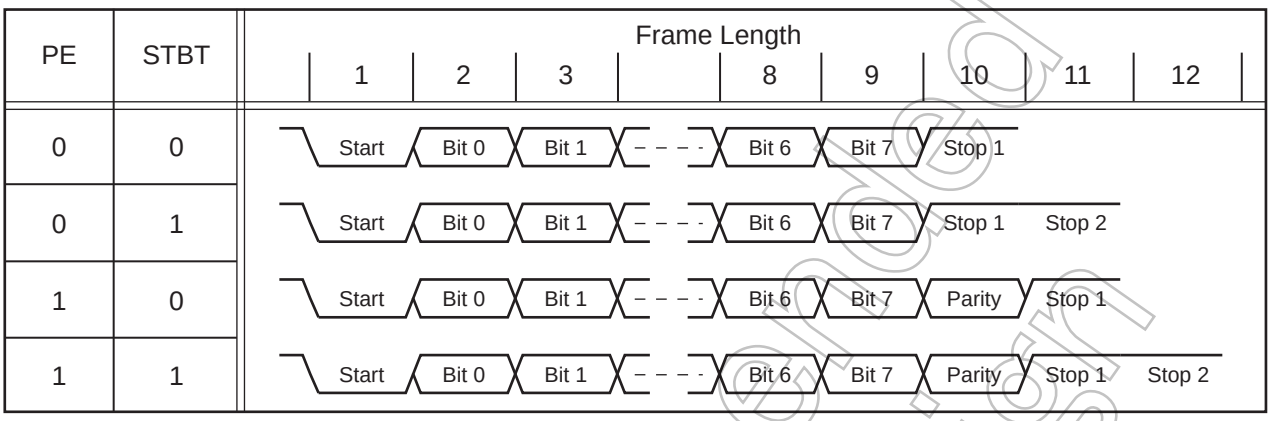

Figure 11-2 Transfer Data Format

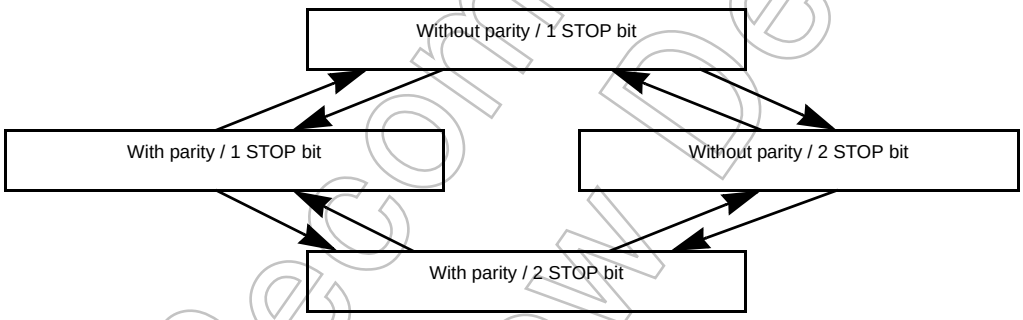

Figure 11-3 Caution on Changing Transfer Data Format

Note: In order to switch the transfer data format, perform transmit operations in the above Figure 11-3 sequence except for the initial setting.

Not Recommended for New Design

11.4 Transfer Rate

The baud rate of UART is set of UARTCR1<BRG>. The example of the baud rate are shown as follows.

Table 11-1 Transfer Rate (Example)

BRG	Source Clock		
	16 MHz	8 MHz	4 MHz
000	76800 [baud]	38400 [baud]	19200 [baud]
001	38400	19200	9600
010	19200	9600	4800
011	9600	4800	2400
100	4800	2400	1200
101	2400	1200	600

When TC3 is used as the UART transfer rate (when UARTCR1<BRG> = “110”), the transfer clock and transfer rate are determined as follows:

Transfer clock [Hz] = TC3 source clock [Hz] / TTREG3 setting value

Transfer Rate [baud] = Transfer clock [Hz] / 16

11.5 Data Sampling Method

The UART receiver keeps sampling input using the clock selected by UARTCR1<BRG> until a start bit is detected in RXD pin input. RT clock starts detecting “L” level of the RXD pin. Once a start bit is detected, the start bit, data bits, stop bit(s), and parity bit are sampled at three times of RT7, RT8, and RT9 during one receiver clock interval (RT clock). (RT0 is the position where the bit supposedly starts.) Bit is determined according to majority rule (The data are the same twice or more out of three samplings).

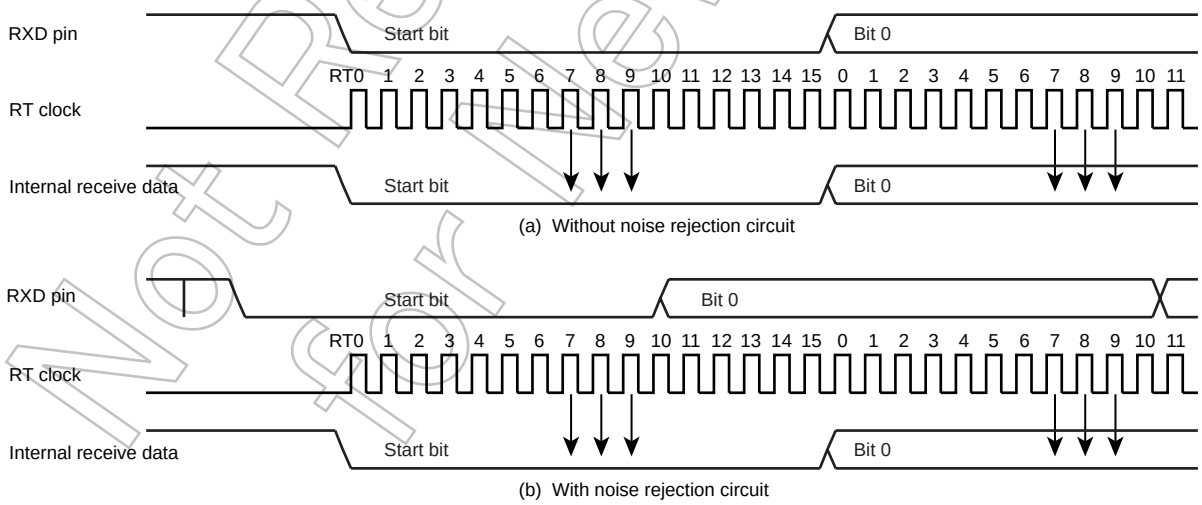

Figure 11-4 Data Sampling Method

Not Recommended for New Design

11.6 STOP Bit Length

Select a transmit stop bit length (1 bit or 2 bits) by UARTCR1<STBT>.

11.7 Parity

Set parity / no parity by UARTCR1<PE> and set parity type (Odd- or Even-numbered) by UARTCR1<EVEN>.

11.8 Transmit/Receive Operation

11.8.1 Data Transmit Operation

Set UARTCR1<TXE> to “1”. Read UARTSR to check UARTSR<TBEP> = “1”, then write data in TDBUF (Transmit data buffer). Writing data in TDBUF zero-clears UARTSR<TBEP>, transfers the data to the transmit shift register and the data are sequentially output from the TXD pin. The data output include a one-bit start bit, stop bits whose number is specified in UARTCR1<STBT> and a parity bit if parity addition is specified. Select the data transfer baud rate using UARTCR1<BRG>. When data transmit starts, transmit buffer empty flag UARTSR<TBEP> is set to “1” and an INTTXD interrupt is generated.

While UARTCR1<TXE> = “0” and from when “1” is written to UARTCR1<TXE> to when send data are written to TDBUF, the TXD pin is fixed at high level.
When transmitting data, first read UARTSR, then write data in TDBUF. Otherwise, UARTSR<TBEP> is not zero-cleared and transmit does not start.

11.8.2 Data Receive Operation

Set UARTCR1<RXE> to “1”. When data are received via the RXD pin, the receive data are transferred to RDBUF (Receive data buffer). At this time, the data transmitted includes a start bit and stop bit(s) and a parity bit if parity addition is specified. When stop bit(s) are received, data only are extracted and transferred to RDBUF (Receive data buffer). Then the receive buffer full flag UARTSR<RBFL> is set and an INTRXD interrupt is generated. Select the data transfer baud rate using UARTCR1<BRG>.

If an overrun error (OERR) occurs when data are received, the data are not transferred to RDBUF (Receive data buffer) but discarded; data in the RDBUF are not affected.

Note: When a receive operation is disabled by setting UARTCR1<RXE> bit to “0”, the setting becomes valid when data receive is completed. However, if a framing error occurs in data receive, the receive-disabling setting may not become valid. If a framing error occurs, be sure to perform a re-receive operation.

Not Recommended for New Design

11.9 Status Flag

11.9.1 Parity Error

When parity determined using the receive data bits differs from the received parity bit, the parity error flag UARTSR<PERR> is set to “1”. The UARTSR<PERR> is cleared to “0” when the RDBUF is read after reading the UARTSR.

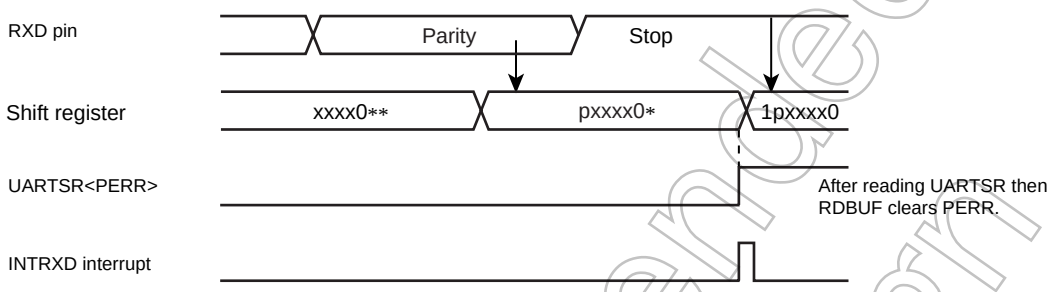

Figure 11-5 Generation of Parity Error

11.9.2 Framing Error

When “0” is sampled as the stop bit in the receive data, framing error flag UARTSR<FERR> is set to “1”. The UARTSR<FERR> is cleared to “0” when the RDBUF is read after reading the UARTSR.

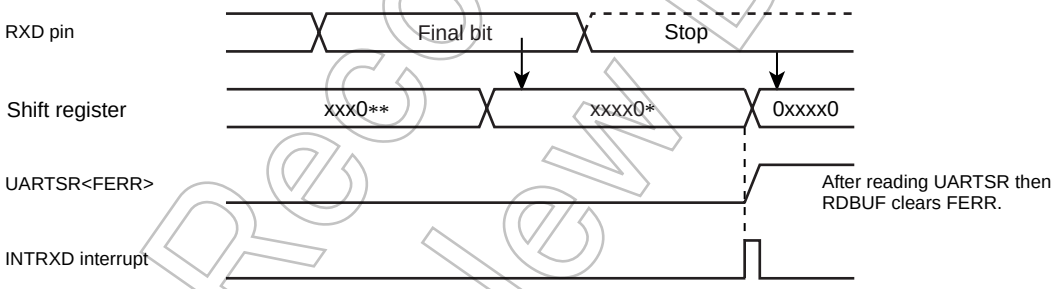

Figure 11-6 Generation of Framing Error

11.9.3 Overrun Error

When all bits in the next data are received while unread data are still in RDBUF, overrun error flag UARTSR<OERR> is set to “1”. In this case, the receive data is discarded; data in RDBUF are not affected. The UARTSR<OERR> is cleared to “0” when the RDBUF is read after reading the UARTSR.

Not Recommended for New Design

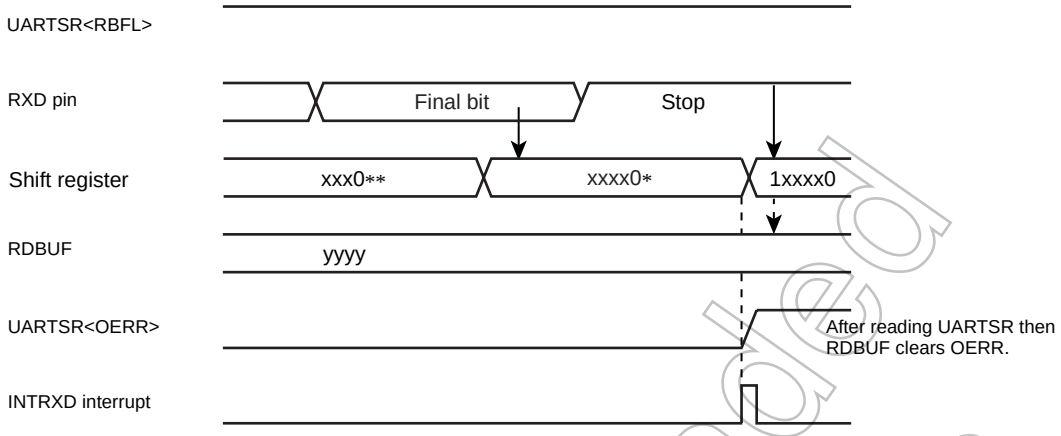

Figure 11-7 Generation of Overrun Error

Note: Receive operations are disabled until the overrun error flag UARTSR<OERR> is cleared.

11.9.4 Receive Data Buffer Full

Loading the received data in RDBUF sets receive data buffer full flag UARTSR<RBFL> to "1". The UARTSR<RBFL> is cleared to “0” when the RDBUF is read after reading the UARTSR.

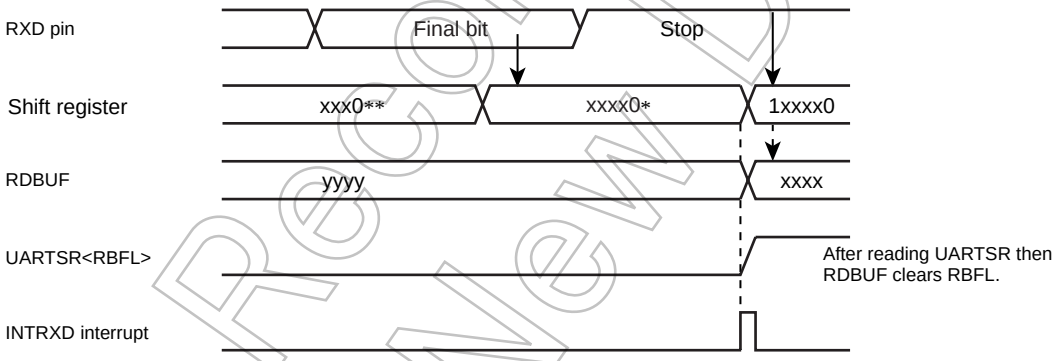

Figure 11-8 Generation of Receive Data Buffer Full

Note: If the overrun error flag UARTSR<OERR> is set during the period between reading the UARTSR and reading the RDBUF, it cannot be cleared by only reading the RDBUF. Therefore, after reading the RDBUF, read the UARTSR again to check whether or not the overrun error flag which should have been cleared still remains set.

11.9.5 Transmit Data Buffer Empty

When no data is in the transmit buffer TDBUF, UARTSR<TBEP> is set to “1”, that is, when data in TDBUF are transferred to the transmit shift register and data transmit starts, transmit data buffer empty flag UARTSR<TBEP> is set to “1”. The UARTSR<TBEP> is cleared to “0” when the TDBUF is written after reading the UARTSR.

Not Recommended for New Design

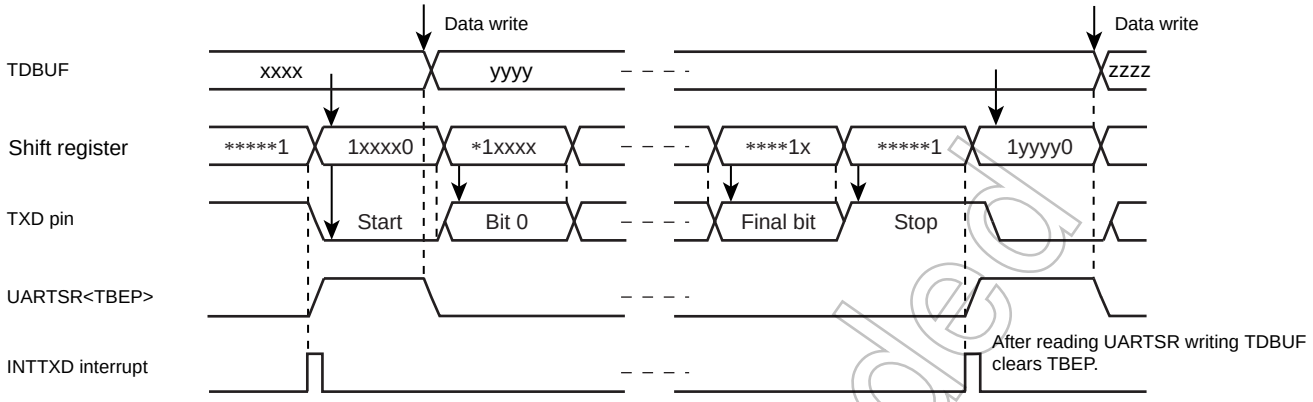

Figure 11-9 Generation of Transmit Data Buffer Empty

11.9.6 Transmit End Flag

When data are transmitted and no data is in TDBUF (UARTSR<TBEP> = "1"), transmit end flag UARTSR<TEND> is set to "1". The UARTSR<TEND> is cleared to "0" when the data transmit is stated after writing the TDBUF.

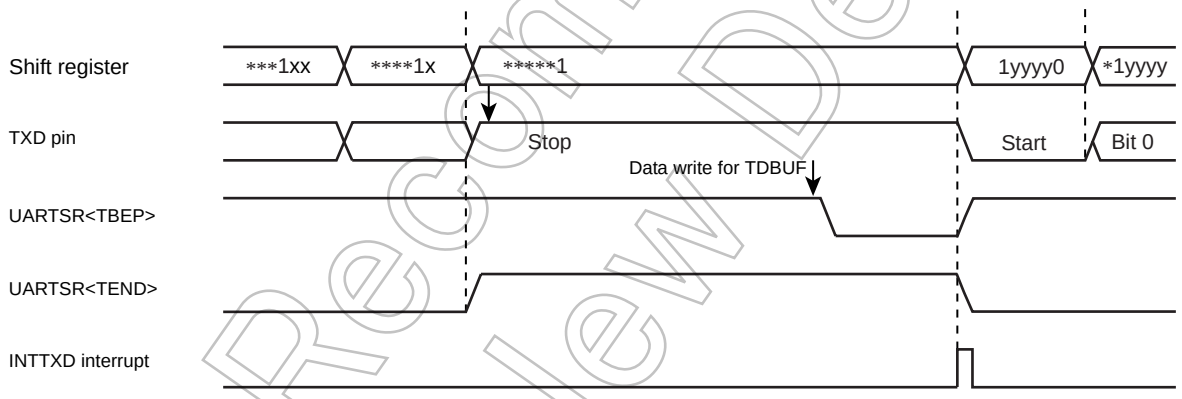

Figure 11-10 Generation of Transmit End Flag and Transmit Data Buffer Empty

Not Recommended for New Design

Not Recommended for New Design

12. 10-bit AD Converter (ADC)

The TMP86PM46NG have a 10-bit successive approximation type AD converter.

12.1 Configuration

The circuit configuration of the 10-bit AD converter is shown in Figure 12-1.

It consists of control register ADCCR1 and ADCCR2, converted value register ADCDR1 and ADCDR2, a DA converter, a sample-hold circuit, a comparator, and a successive comparison circuit.

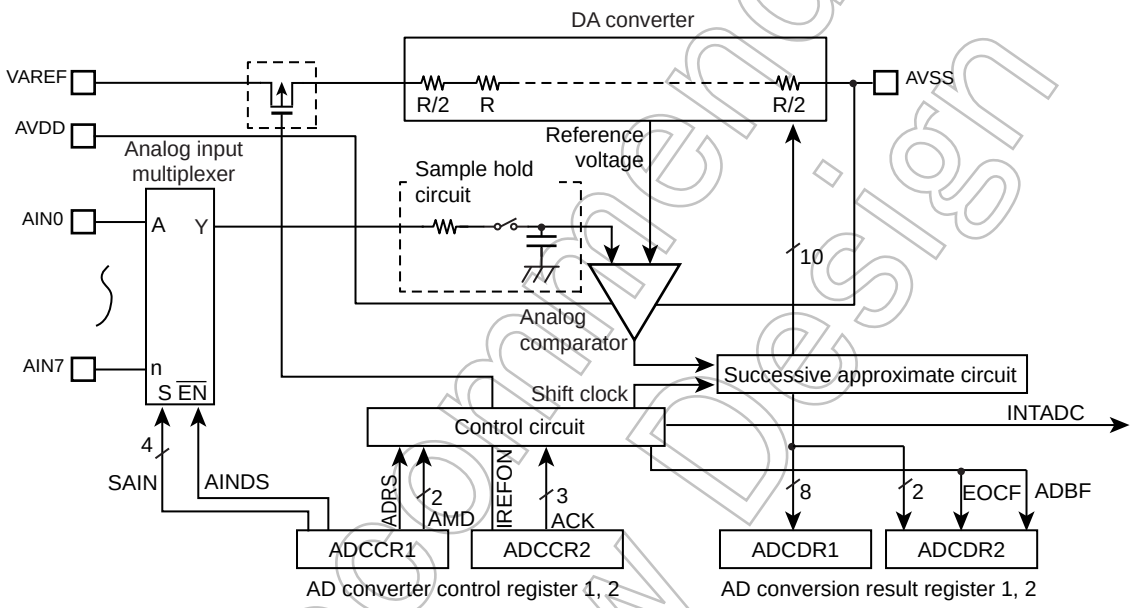

Note: Before using AD converter, set appropriate value to I/O port register conbining a analog input port. For details, see the section on "I/O ports".

Figure 12-1 10-bit AD Converter

Not Recommended for New Design

12.2 Register configuration

The AD converter consists of the following four registers:

1. AD converter control register 1 (ADCCR1)

   This register selects the analog channels and operation mode (Software start or repeat) in which to perform AD conversion and controls the AD converter as it starts operating.

2. AD converter control register 2 (ADCCR2)

   This register selects the AD conversion time and controls the connection of the DA converter (Ladder resistor network).

3. AD converted value register 1 (ADCDR1)

   This register used to store the digital value fter being converted by the AD converter.

4. AD converted value register 2 (ADCDR2)

   This register monitors the operating status of the AD converter.

AD Converter Control Register 1

ADCCR1 (001CH)	7	6	5	4	3	2	1	0	
	ADRS	AMD		AINDS	SAIN				(Initial value: 0001 0000)

ADRS	AD conversion start	0: - 1: AD conversion start	R/W
AMD	AD operating mode	00: AD operation disable 01: Software start mode 10: Reserved 11: Repeat mode	
AINDS	Analog input control	0: Analog input enable 1: Analog input disable	
SAIN	Analog input channel select	0000: AIN0 0001: AIN1 0010: AIN2 0011: AIN3 0100: AIN4 0101: AIN5 0110: AIN6 0111: AIN7 1000: Reserved 1001: Reserved 1010: Reserved 1011: Reserved 1100: Reserved 1101: Reserved 1110: Reserved 1111: Reserved	

Note 1: Select analog input channel during AD converter stops (ADCDR2<ADBF> = "0").

Note 2: When the analog input channel is all use disabling, the ADCCR1<AINDS> should be set to "1".

Note 3: During conversion, Do not perform port output instruction to maintain a precision for all of the pins because analog input port use as general input port. And for port near to analog input, Do not input intense signaling of change.

Note 4: The ADCCR1<ADRS> is automatically cleared to "0" after starting conversion.

Note 5: Do not set ADCCR1<ADRS> newly again during AD conversion. Before setting ADCCR1<ADRS> newly again, check ADCDR2<EOCF> to see that the conversion is completed or wait until the interrupt signal (INTADC) is generated (e.g., interrupt handling routine).

Note 6: After STOP or SLOW/SLEEP mode are started, AD converter control register1 (ADCCR1) is all initialized and no data can be written in this register. Therfore, to use AD converter again, set the ADCCR1 newly after returning to NORMAL1 or NORMAL2 mode.

Not Recommended for New Design

AD Converter Control Register 2

ADCCR2 (001DH)	7	6	5	4	3	2	1	0	
			IREFON	"1"	ACK			"0"	(Initial value: **0* 000*)

IREFON	DA converter (Ladder resistor) connection control	0: Connected only during AD conversion 1: Always connected	R/W
ACK	AD conversion time select (Refer to the following table about the conversion time)	000: 39/fc 001: Reserved 010: 78/fc 011: 156/fc 100: 312/fc 101: 624/fc 110: 1248/fc 111: Reserved	

Note 1: Always set bit0 in ADCCR2 to "0" and set bit4 in ADCCR2 to "1".

Note 2: When a read instruction for ADCCR2, bit6 to 7 in ADCCR2 read in as undefined data.

Note 3: After STOP or SLOW/SLEEP mode are started, AD converter control register2 (ADCCR2) is all initialized and no data can be written in this register. Therfore, to use AD converter again, set the ADCCR2 newly after returning to NORMAL1 or NORMAL2 mode.

Table 12-1 ACK setting and Conversion time

Condition / ACK	Conversion time	16 MHz	8 MHz	4 MHz	2 MHz	10 MHz	5 MHz	2.5 MHz
000	39/fc	-	-	-	19.5 μs	-	-	15.6 μs
001	Reserved							
010	78/fc	-	-	19.5 μs	39.0 μs	-	15.6 μs	31.2 μs
011	156/fc	-	19.5 μs	39.0 μs	78.0 μs	15.6 μs	31.2 μs	62.4 μs
100	312/fc	19.5 μs	39.0 μs	78.0 μs	156.0 μs	31.2 μs	62.4 μs	124.8 μs
101	624/fc	39.0 μs	78.0 μs	156.0 μs	-	62.4 μs	124.8 μs	-
110	1248/fc	78.0 μs	156.0 μs	-	-	124.8 μs	-	-
111	Reserved							

Note 1: Setting for "–" in the above table are inhibited. fc: High Frequency oscillation clock [Hz]

Note 2: Set conversion time setting should be kept more than the following time by Analog reference voltage (VAREF) .

- VAREF = 4.5 to 5.5 V 15.6 μs and more
- VAREF = 2.7 to 5.5 V 31.2 μs and more
- VAREF = 1.8 to 5.5 V 124.8 μs and more

AD Converted value Register 1

ADCDR1 (001FH)	7	6	5	4	3	2	1	0	
	AD09	AD08	AD07	AD06	AD05	AD04	AD03	AD02	(Initial value: 0000 0000)

AD Converted value Register 2

ADCDR2 (001EH)	7	6	5	4	3	2	1	0	
	AD01	AD00	EOCF	ADBF					(Initial value: 0000 ****)

Not Recommended for New Design

EOCF	AD conversion end flag	0: Before or during conversion 1: Conversion completed	Read only
ADBF	AD conversion BUSY flag	0: During stop of AD conversion 1: During AD conversion	

Note 1: The ADCDR2<EOCF> is cleared to "0" when reading the ADCDR1. Therfore, the AD conversion result should be read to ADCDR2 more first than ADCDR1.

Note 2: The ADCDR2<ADBF> is set to "1" when AD conversion starts, and cleared to "0" when AD conversion finished. It also is cleared upon entering STOP mode or SLOW mode .

Note 3: If a read instruction is executed for ADCDR2, read data of bit3 to bit0 are unstable.

Not Recommended for New Design

12.3 Function

12.3.1 Software Start Mode

After setting ADCCR1<AMD> to “01” (software start mode), set ADCCR1<ADRS> to “1”. AD conversion of the voltage at the analog input pin specified by ADCCR1<SAIN> is thereby started.

After completion of the AD conversion, the conversion result is stored in AD converted value registers (ADCDR1, ADCDR2) and at the same time ADCDR2<EOCF> is set to 1, the AD conversion finished interrupt (INTADC) is generated.

ADRS is automatically cleared after AD conversion has started. Do not set ADCCR1<ADRS> newly again (Restart) during AD conversion. Before setting ADRS newly again, check ADCDR2<EOCF> to see that the conversion is completed or wait until the interrupt signal (INTADC) is generated (e.g., interrupt handling routine).

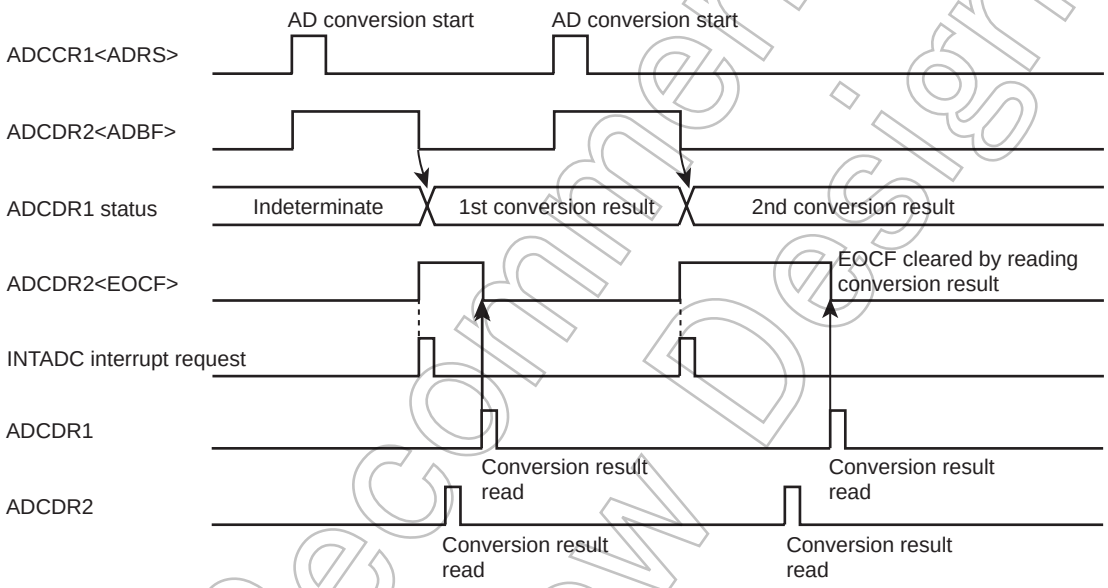

Figure 12-2 Software Start Mode

12.3.2 Repeat Mode

AD conversion of the voltage at the analog input pin specified by ADCCR1<SAIN> is performed repeatedly. In this mode, AD conversion is started by setting ADCCR1<ADRS> to “1” after setting ADCCR1<AMD> to “11” (Repeat mode).

After completion of the AD conversion, the conversion result is stored in AD converted value registers (ADCDR1, ADCDR2) and at the same time ADCDR2<EOCF> is set to 1, the AD conversion finished interrupt (INTADC) is generated.

In repeat mode, each time one AD conversion is completed, the next AD conversion is started. To stop AD conversion, set ADCCR1<AMD> to “00” (Disable mode) by writing 0s. The AD convert operation is stopped immediately. The converted value at this time is not stored in the AD converted value register.

Not Recommended for New Design

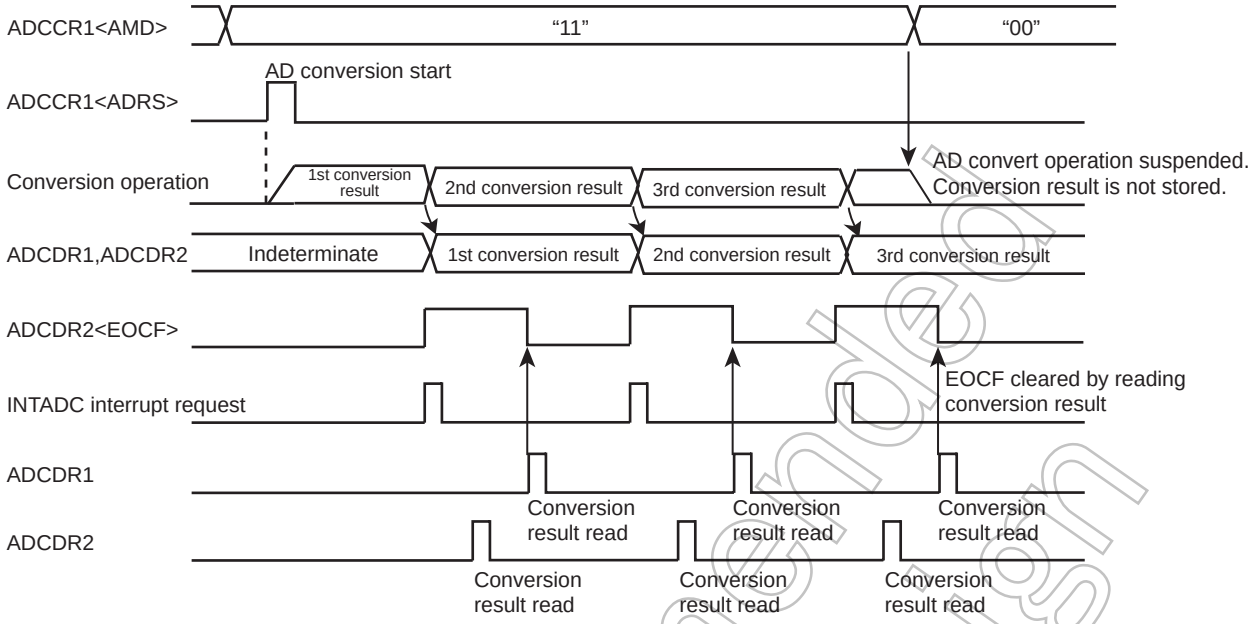

Figure 12-3 Repeat Mode

12.3.3 Register Setting

1. Set up the AD converter control register 1 (ADCCR1) as follows:
   - Choose the channel to AD convert using AD input channel select (SAIN).
   - Specify analog input enable for analog input control (AINDS).
   - Specify AMD for the AD converter control operation mode (software or repeat mode).
2. Set up the AD converter control register 2 (ADCCR2) as follows:
   - Set the AD conversion time using AD conversion time (ACK). For details on how to set the conversion time, refer to Figure 12-1 and AD converter control register 2.
   - Choose IREFON for DA converter control.
3. After setting up (1) and (2) above, set AD conversion start (ADRS) of AD converter control register 1 (ADCCR1) to "1". If software start mode has been selected, AD conversion starts immediately.
4. After an elapse of the specified AD conversion time, the AD converted value is stored in AD converted value register 1 (ADCDR1) and the AD conversion finished flag (EOCF) of AD converted value register 2 (ADCDR2) is set to "1", upon which time AD conversion interrupt INTADC is generated.
5. EOCF is cleared to "0" by a read of the conversion result. However, if reconverted before a register read, although EOCF is cleared the previous conversion result is retained until the next conversion is completed.

Not Recommended for New Design

Example :After selecting the conversion time 19.5 μs at 16 MHz and the analog input channel AIN3 pin, perform AD conversion once. After checking EOCF, read the converted value, store the lower 2 bits in address 0009EH nd store the upper 8 bits in address 0009FH in RAM. The operation mode is software start mode.

```
                : (port setting)    :                          ;Set port register approrriately before setting AD
                                                               converter registers.
                :                   :                          (Refer to section I/O port in details)
                LD                  (ADCCR1) ,  00100011B      ; Select AIN3
                LD                  (ADCCR2) ,  11011000B      ;Select conversion time(312/fc) and operation
                                                               mode
                SET                 (ADCCR1) . 7               ; ADRS = 1(AD conversion start)
SLOOP :         TEST                (ADCDR2) . 5               ; EOCF= 1 ?
                JRS                 T, SLOOP

                LD                  A , (ADCDR2)               ; Read result data
                LD                  (9EH) , A
                LD                  A , (ADCDR1)               ; Read  result data
                LD                  (9FH), A
```

12.4 STOP/SLOW Modes during AD Conversion

When standby mode (STOP or SLOW mode) is entered forcibly during AD conversion, the AD convert operation is suspended and the AD converter is initialized (ADCCR1 and ADCCR2 are initialized to initial value). Also, the conversion result is indeterminate. (Conversion results up to the previous operation are cleared, so be sure to read the conversion results before entering standby mode (STOP or SLOW mode).) When restored from standby mode (STOP or SLOW mode), AD conversion is not automatically restarted, so it is necessary to restart AD conversion. Note that since the analog reference voltage is automatically disconnected, there is no possibility of current flowing into the analog reference voltage.

Not Recommended for New Design

12.5 Analog Input Voltage and AD Conversion Result

The analog input voltage is corresponded to the 10-bit digital value converted by the AD as shown in Figure 12-4.

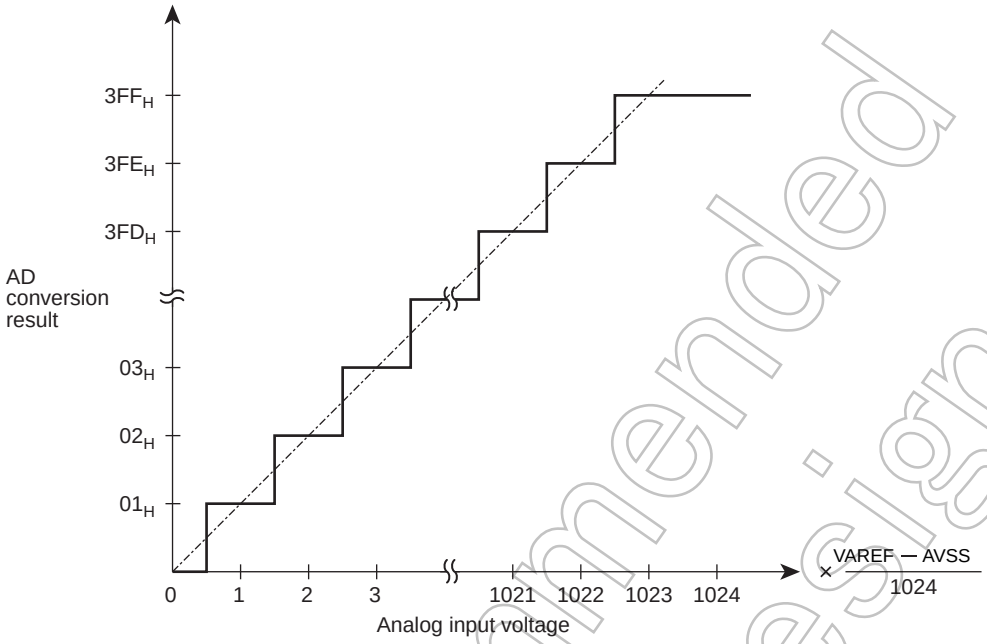

Figure 12-4 Analog Input Voltage and AD Conversion Result (Typ.)

Not Recommended for New Design

12.6 Precautions about AD Converter

12.6.1 Analog input pin voltage range

Make sure the analog input pins (AIN0 to AIN7) are used at voltages within VAREF to AVSS. If any voltage outside this range is applied to one of the analog input pins, the converted value on that pin becomes uncertain. The other analog input pins also are affected by that.

12.6.2 Analog input shared pins

The analog input pins (AIN0 to AIN7) are shared with input/output ports. When using any of the analog inputs to execute AD conversion, do not execute input/output instructions for all other ports. This is necessary to prevent the accuracy of AD conversion from degrading. Not only these analog input shared pins, some other pins may also be affected by noise arising from input/output to and from adjacent pins.

12.6.3 Noise Countermeasure

The internal equivalent circuit of the analog input pins is shown in Figure 12-5. The higher the output impedance of the analog input source, more easily they are susceptible to noise. Therefore, make sure the output impedance of the signal source in your design is 5 kΩ or less. Toshiba also recommends attaching a capacitor external to the chip.

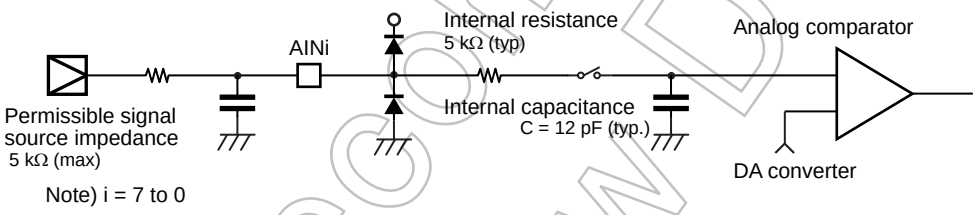

Figure 12-5 Analog Input Equivalent Circuit and Example of Input Pin Processing

Not Recommended for New Design

Not Recommended for New Design

13. Key-on Wakeup (KWU)

In the TMP86PM46NG, the STOP mode is released by not only P20($\overline{INT5}$/$\overline{STOP}$) pin but also four (STOP2 to STOP5) pins.

When the STOP mode is released by STOP2 to STOP5 pins, the $\overline{STOP}$ pin needs to be used.
In details, refer to the following section " 13.2 Control ".

13.1 Configuration

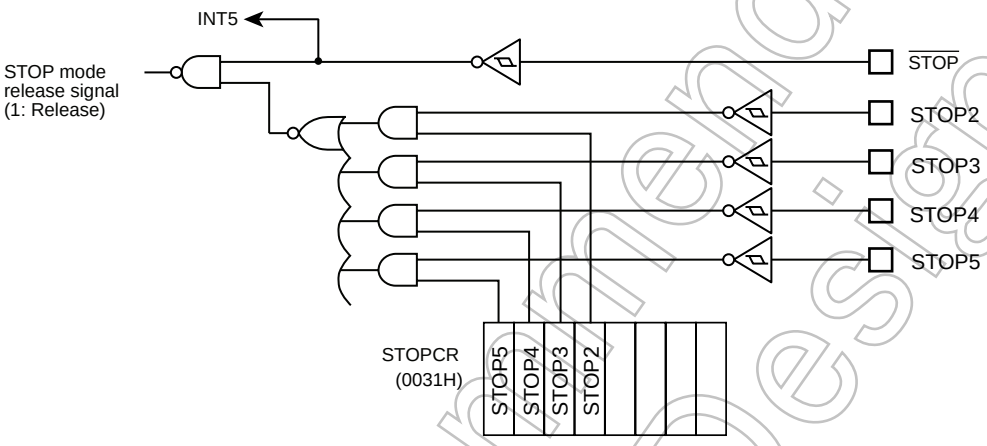

Figure 13-1 Key-on Wakeup Circuit

13.2 Control

STOP2 to STOP5 pins can controlled by Key-on Wakeup Control Register (STOPCR). It can be configured as enable/disable in 1-bit unit. When those pins are used for STOP mode release, configure corresponding I/O pins to input mode by I/O port register beforehand.

Key-on Wakeup Control Register

STOPCR	7	6	5	4	3	2	1	0	
(0031H)	STOP5	STOP4	STOP3	STOP2					(Initial value: 0000 ****)

STOP5	STOP mode released by STOP5	0:Disable 1:Enable	Write only
STOP4	STOP mode released by STOP4	0:Disable 1:Enable	Write only
STOP3	STOP mode released by STOP3	0:Disable 1:Enable	Write only
STOP2	STOP mode released by STOP2	0:Disable 1:Enable	Write only

13.3 Function

Stop mode can be entered by setting up the System Control Register (SYSCR1), and can be exited by detecting the "L" level on STOP2 to STOP5 pins, which are enabled by STOPCR, for releasing STOP mode (Note1).

Not Recommended for New Design

Also, each level of the STOP2 to STOP5 pins can be confirmed by reading corresponding I/O port data register, check all STOP2 to STOP5 pins "H" that is enabled by STOPCR before the STOP mode is startd (Note2,3).

Note 1: When the STOP mode released by the edge release mode (SYSCR1<RELM> = “0”), inhibit input from STOP2 to STOP5 pins by Key-on Wakeup Control Register (STOPCR) or must be set "H" level into STOP2 to STOP5 pins that are available input during STOP mode.

Note 2: When the $\overline{\text{STOP}}$ pin input is high or STOP2 to STOP5 pins inputwhich is enabled by STOPCR is low, executing an instruction which starts STOP mode will not place in STOP mode but instead will immediately start the release sequence (Warm up).

Note 3: The input circuit of Key-on Wakeup input and Port input is separatedÅAso each input voltage threshold value is diffrent. Therefore, a value comes from port input before STOP mode start may be diffrent from a value which is detected by Key-on Wakeup input (Figure 13-2).

Note 4: $\overline{\text{STOP}}$ pin doesn’t have the control register such as STOPCR, so when STOP mode is released by STOP2 to STOP5 pins, $\overline{\text{STOP}}$ pin also should be used as STOP mode release function.

Note 5: In STOP mode, Key-on Wakeup pin which is enabled as input mode (for releasing STOP mode) by Key-on Wakeup Control Register (STOPCR) may genarate the penetration current, so the said pin must be disabled AD conversion input (analog voltage input).

Note 6: When the STOP mode is released by STOP2 to STOP5 pins, the level of $\overline{\text{STOP}}$ pin should hold "L" level (Figure 13-3).

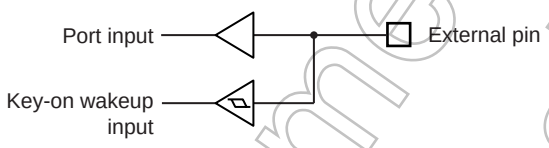

Figure 13-2 Key-on Wakeup Input and Port Input

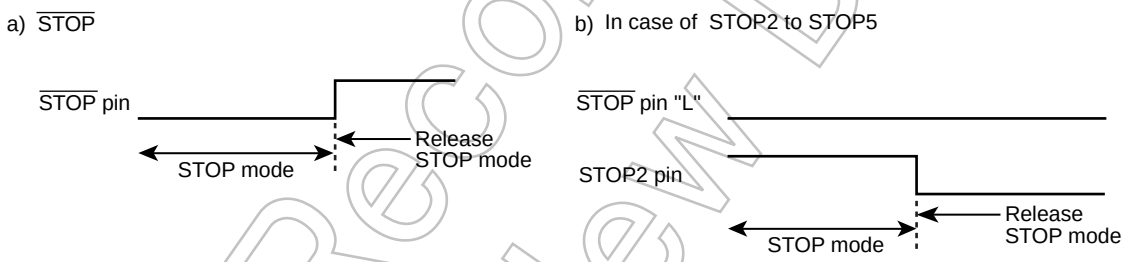

Figure 13-3 Priority of STOP pin and STOP2 to STOP5 pins

Table 13-1 Release level (edge) of STOP mode

Pin name	Release level (edge)	
	SYSCR1<RELM>="1" (Note2)	SYSCR1<RELM>="0"
$\overline{\text{STOP}}$	"H" level	Rising edge
STOP2	"L" level	Don’t use (Note1)
STOP3	"L" level	Don’t use (Note1)
STOP4	"L" level	Don’t use (Note1)
STOP5	"L" level	Don’t use (Note1)

Not Recommended for New Design

14. OTP operation

This section describes the funstion and basic operationalblocks of TMP86PM46NG. The TMP86PM46NG has PROM in place of the mask ROM which is included in the TMP86CM46A. The configuration and function are the same as the TMP86CM46A. In addition, TMP86PM46NG operates as the single clock mode when releasing reset. When using the dual clock mode, oscillate a low-frequency clock by [SET. (SYSCR2). XTEN] command at the beginning of program.

14.1 Operating mode

The TMP86PM46NG has MCU mode and PROM mode.

14.1.1 MCU mode

The MCU mode is set by fixing the TEST/VPP pin to the low level. (TEST/VPP pin cannot be used open because it has no built-in pull-down resistor).

14.1.1.1 Program Memory

The TMP86PM46NG has 32K bytes built-in one-time-PROM (addresses 8000 to FFFFH in the MCU mode, addresses 0000 to 7FFFH in the PROM mode).
When using TMP86PM46NG for evaluation of mask ROM products, the program is written in the program storing area shown in Figure 14-1.

Since the TMP86PM46NG supports several mask ROM sizes, check the difference in memory size and program storing area between the one-time PROM and the mask ROM to be used.

Not Recommended for New Design

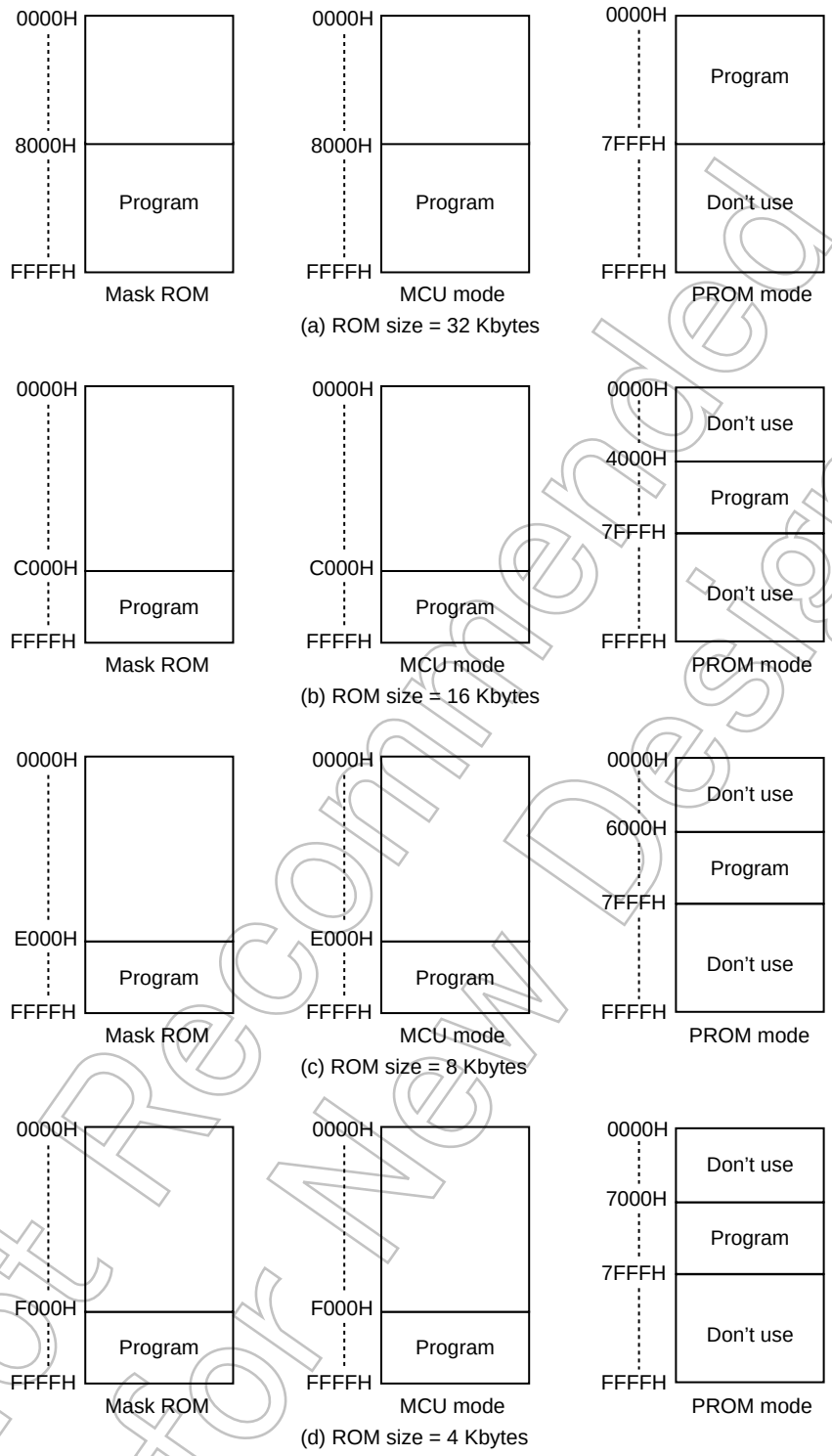

Figure 14-1 Program Memory Area

Note: The area that is not in use should be set data to FFH, or a general-purpose PROM programmer should be set only in the program memory area to access.

14.1.1.2 Data Memory

TMP86PM46NG has a built-in 1024 bytes Data memory (static RAM).

Not Recommended for New Design

14.1.1.3 Input/Output Circuiry

1. Control pins

   The control pins of the TMP86PM46NG are the same as those of the TMP86CM46A except that the TEST pin does not have a built-in pull-down resistor.

2. I/O ports

   The I/O circuitries of the TMP86PM46NG I/O ports are the same as those of the TMP86CM46A.

14.1.2 PROM mode

The PROM mode is set by setting the $\overline{\text{RESET}}$ pin, TEST pin and other pins as shown in Table 14-1 and Figure 14-2. The programming and verification for the internal PROM is acheived by using a general-purpose PROM programmer with the adaptor socket.

Table 14-1 Pin name in PROM mode

Pin name (PROM mode)	I/O	Function	Pin name (MCU mode)
A15 to A8	Input	Program memory address input	P07 to P00
A7 to A0	Input	Program memory address input	P37 to P30
D7 to D0	Input/Output	Program memory data input/output	P47 to P40
$\overline{\text{CE}}$	Input	Chip enable signal input	P13
$\overline{\text{OE}}$	Input	Output enable signal input	P14
$\overline{\text{PGM}}$	Input	Program mode signal input	P15
VPP	Power supply	+12.75V/5V (Power supply of program)	TEST
VCC	Power supply	+6.25V/5V	VDD
GND	Power supply	0V	VSS
VCC	Setting pin	Fix to "H" level in PROM mode	AVDD,P11,P21
GND	Setting pin	Fix to "L" level in PROM mode	AVSS,VAREF,P10,P12,P20,P22
$\overline{\text{RESET}}$	Setting pin	Fix to "L" level in PROM mode	$\overline{\text{RESET}}$
XIN (CLK)	Input	Set oscillation with resonator In case of external CLK input, set CLK to XIN and set XOUT to open.	XIN
XOUT	Output		XOUT

Note 1: The high-speed program mode can be used. The setting is different according to the type of PROM programmer to use, refer to each description of PROM programmer.
TMP86PM46NG does not support the electric signature mode, apply the ROM type of PROM programmer to TC571000D/AD.

Note 2: No pin is applied to A16 pin of TC571000D/AD(Open) in PROM mode.

Always set the adapter socket switch to the "N" side when using TOSHIBA's adaptor socket.

Not Recommended for New Design

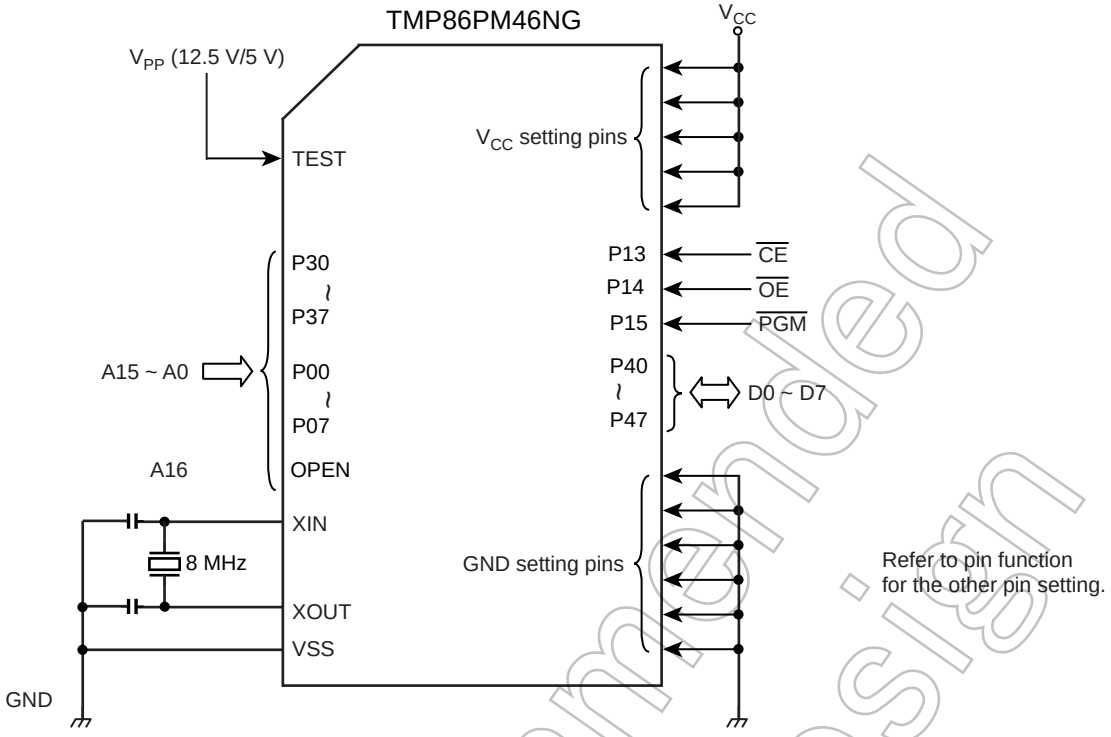

Note 1: EPROM adaptor socket (TC571000 • 1M bit EPROM)
Note 2: PROM programmer connection adaptor sockets
BM11188 for TMP86PM46NG

Note 3: Inside pin name for TMP86PM46NG
Outside pin name for EPROM

Figure 14-2 PROM mode setting

Not Recommended for New Design

14.1.2.1 Programming Flowchart (High-speed program writing)

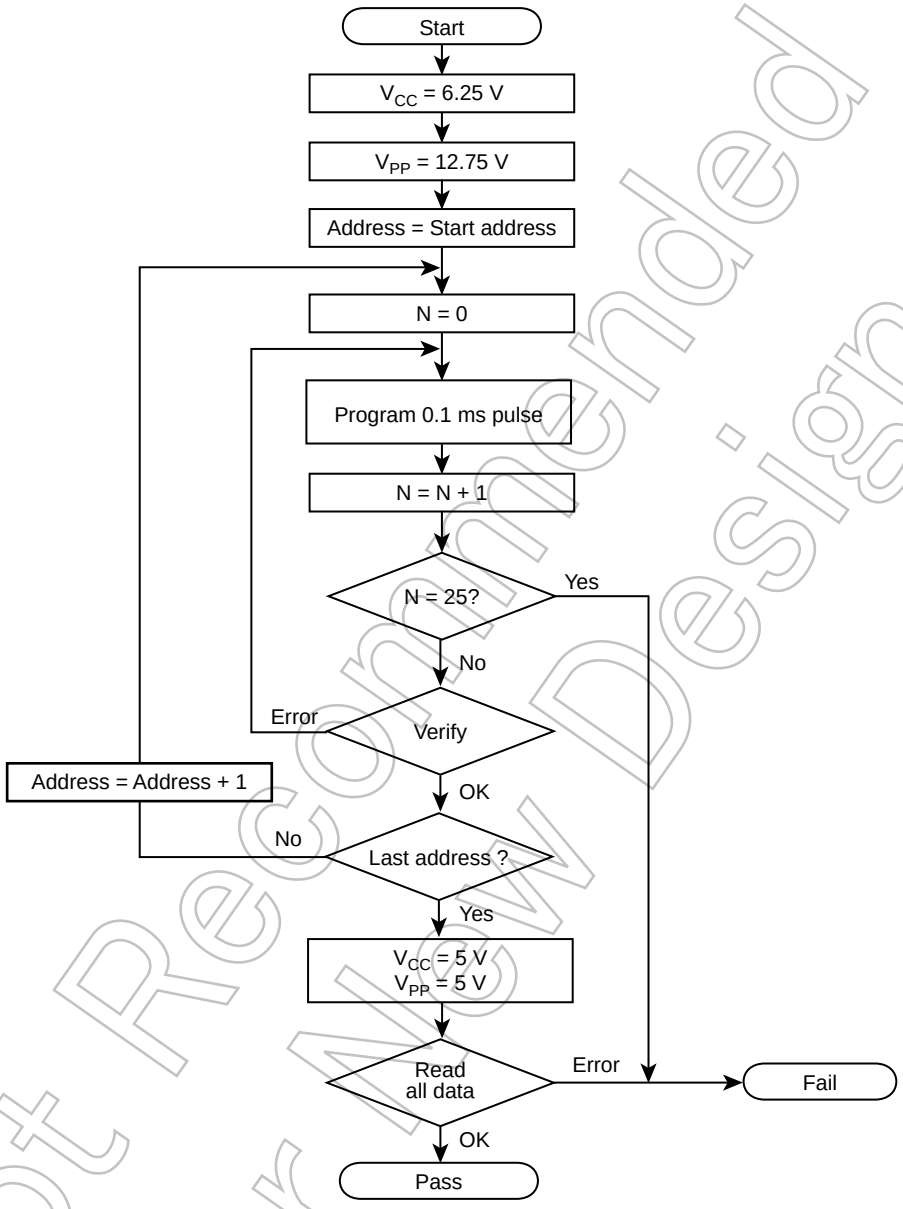

Figure 14-3 Programming Flowchart

The high-speed programming mode is set by applying Vpp=12.75V (programming voltage) to the Vpp pin when the Vcc = 6.25 V. After the address and data are fixed, the data in the address is written by applying 0.1[msec] of low level program pulse to $\overline{PGM}$ pin. Then verify if the data is written.
If the programmed data is incorrect, another 0.1[msec] pulse is applied to $\overline{PGM}$ pin. This programming procedure is repeated until correct data is read from the address (maximum of 25 times).
Subsequently, all data are programmed in all address. When all data were written, verfy all address under the condition Vcc=Vpp=5V.

Not Recommended for New Design

14.1.2.2 Program Writing using a General-purpose PROM Programmer

1. Recommended OTP adaptor

   BM11188 for TMP86PM46NG

2. Setting of OTP adaptor

   Set the switch (SW1) to "N" side.

3. Setting of PROM programmer

   a. Set PROM type to TC571000D/AD.

      Vpp: 12.75 V (high-speed program writing mode)

   b. Data transmission (or Copy) (Note 1)

      The PROM of TMP86PM46NG is located on different address; it depends on operating mode: MCU mode and PROM mode. When you write the data of ROM for mask ROM products, the data shuold be transferred (or copied) from the address for MCU mode to that for PROM mode before writing operation is executed. For the applicable program areas of MCU mode and PROM mode are different, refer to TMP86PM46NG" Figure 14-1 Program Memory Area ".

      Example: In the block transfer (copy) mode, executed as below.

      32KB ROM capacity: 08000~0FFFFH → 00000~07FFFH

      16KB ROM capacity: 0C000~0FFFFH → 04000~07FFFH

      8KB ROM capacity : 0E000~0FFFFH → 06000~07FFFH

      4KB ROM capacity : 0F000~0FFFFH → 07000~07FFFH

   c. Setting of the program address (Note 1)

      Start address: 0000H (When 16 KB ROM capacity, start address is 4000H.
      When 8 KB ROM capacity, start address is 6000H.
      When 4KB ROM capacity, start address is 7000H.)

      End address: 7FFFH

4. Writting

   Write and verify according to the above procedure "Setting of PROM programmer".

Note 1: For the setting method, refer to each description of PROM programmer.
Make sure to set the data of address area that is not in use to FFH.

Note 2: When setting MCU to the adaptor or when setting the adaptor to the PROM programmer, set the first pin of the adaptor and that of PROM programmer socket matched. If the first pin is conversely set, MCU or adaptor or programmer would be damaged.

Note 3: The TMP86PM46NG does not support the electric signature mode.
If PROM programmer uses the signature, the device would be damaged because of applying voltage of 12±0.5V to pin 9(A9) of the address. Don't use the signature.

Not Recommended for New Design

15. Input/Output Circuitry

15.1 Control Pins

The input/output circuitries of the TMP86PM46NG control pins are shown below.

Control Pin	I/O	Input/Output Circuitry	Remarks
XIN XOUT	Input Output	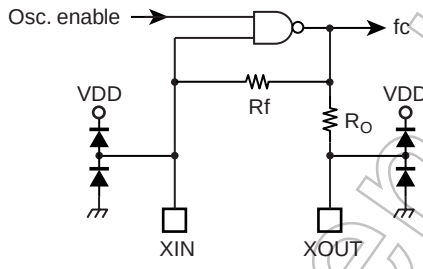	Resonator connecting pins (high-frequency) R_f = 1.2 MΩ (typ.) R_O = 1.5 kΩ (typ.)
XTIN XTOUT	Input Output	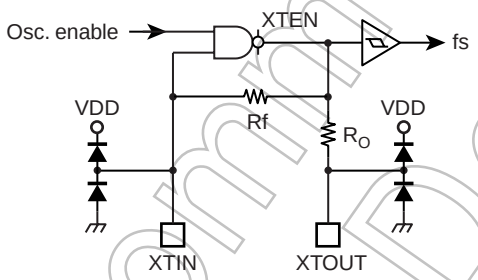	Resonator connecting pins (Low-frequency) R_f = 6 MΩ (typ.) R_O = 220 kΩ (typ.)
$\overline{\text{RESET}}$	Input Output	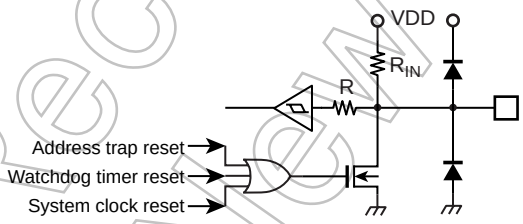	Hysteresis input Pull-up resistor R_{IN} = 220 kΩ (typ.) R = 1 kΩ (typ.)
TEST	Input	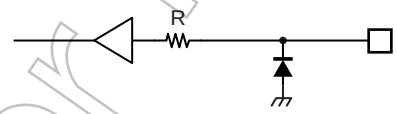	Without pull-down resistor R = 1 kΩ (typ.) Fix the TEST pin at low-level

Note: The TEST pin of the TMP86PM46/PH46 does not have a pull-down resistor and protect diode (D1). Fix the TEST pin at low-level.

Not Recommended for New Design

15.2 Input/Output Ports

Port	I/O	Input/Output Circuitry	Remarks
P0	Input Output	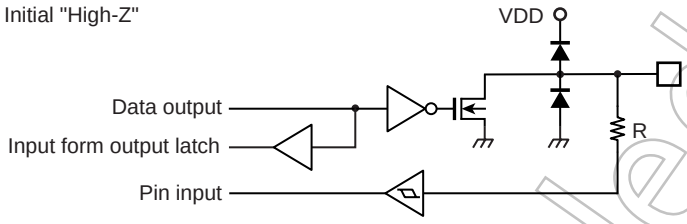	Sink open drain output High current output Hysteresis input R = 100 Ω (typ.)
P1	Input Output	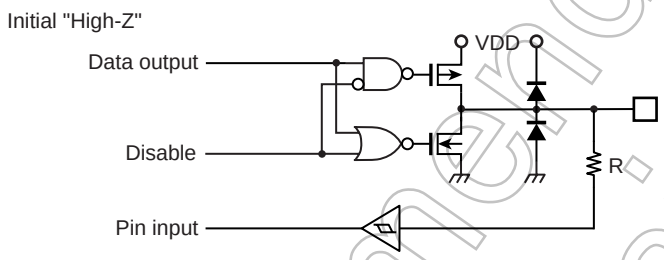	Tri-state I/O Hysteresis input R = 100 Ω (typ.)
P2	Input Output	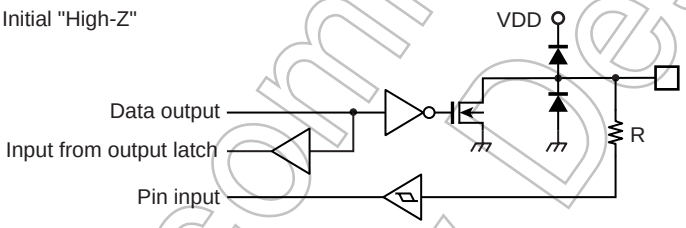	Sink open drain output High current output Hysteresis input R = 100 Ω (typ.)
P3	Input Output	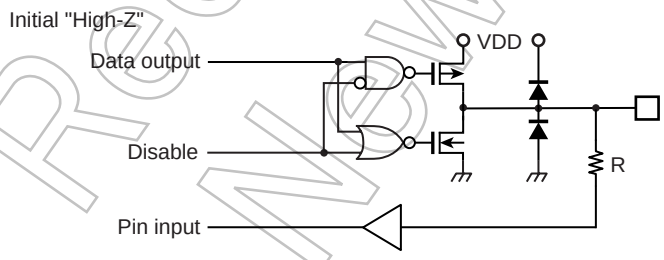	Tri-state I/O R = 100 Ω (typ.)
P4	Input Output	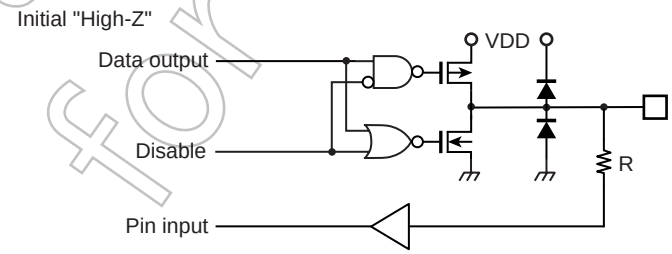	Tri-state I/O High current output (Nch) R = 100 Ω (typ.)

Not Recommended for New Design

16. Electrical Characteristics

16.1 Absolute Maximum Ratings

The absolute maximum ratings are rated values, which must not be exceeded during operation, even for an instant. Any one of the ratings must not be exceeded. If any absolute maximum rating is exceeded, a device may break down or its performance may be degraded, causing it to catch fire or explode resulting in injury to the user. Thus, when designing products which include this device, ensure that no absolute maximum rating value will ever be exceeded.

(V_{SS} = 0 V)

Parameter	Symbol	Pins	Rating	Unit
Supply Voltage	V_{DD}		–0.3 to 6.5	V
Program Voltage	V_{PP}	TEST/V_{PP}	–0.3 to 13.0	
Input Voltage	V_{IN}		–0.3 to V_{DD}+0.3	
Output Voltage	V_{OUT}	P21, P22, Tri-state port	–0.3 to V_{DD}+0.3	
Output Current (Per 1 pin)	I_{OUT1}	P1, P3, P4 port	–1.8	mA
	I_{OUT2}	P1, P3 port	3.2	
	I_{OUT3}	P0, P2, P4 port	30	
Output Current (Total)	ΣI_{OUT2}	P1, P3 port	60	
	ΣI_{OUT3}	P0, P2, P4 port	80	
Power Dissipation [Topr = 85°C]	PD		250	mW
Soldering Temperature (Time)	Tsld		260 (10 s)	°C
Storage Temperature	Tstg		–55 to 125	
Operating Temperature	Topr		–40 to 85	

Not Recommended for New Design

16.2 Recommended Operating Condition

The recommended operating conditions for a device are operating conditions under which it can be guaranteed that the device will operate as specified. If the device is used under operating conditions other than the recommended operating conditions (supply voltage, operating temperature range, specified AC/DC values etc.), malfunction may occur. Thus, when designing products which include this device, ensure that the recommended operating conditions for the device are always adhered to.

(V_{SS} = 0 V, Topr = -40 to 85°C)

Parameter	Symbol	Pins	Condition		Min	Max	Unit
Supply Voltage	V_{DD}		fc = 16 MHz	NORMAL1, 2 mode	4.5	5.5	V
				IDLE0, 1, 2 mode			
			fc = 8 MHz	NORMAL1, 2 mode	2.7		
				IDLE0, 1, 2 mode			
			fc = 4.2 MHz	NORMAL1, 2 mode	1.8		
				IDLE0, 1, 2 mode			
			fs = 32.768 kHz	SLOW1, 2 mode			
				SLEEP0, 1, 2 mode			
				STOP mode			
Input high Level	V_{IH1}	Except Hysteresis input	$V_{DD} \geq 4.5$ V		V_{DD}×0.70	V_{DD}	
	V_{IH2}	Hysteresis input			V_{DD}×0.75		
	V_{IH3}		$V_{DD} < 4.5$ V		V_{DD}×0.90		
Input low Level	V_{IL1}	Except Hysteresis input	$V_{DD} \geq 4.5$ V		0	V_{DD}×0.30	
	V_{IL2}	Hysteresis input				V_{DD}×0.25	
	V_{IL3}		$V_{DD} < 4.5$ V			V_{DD}×0.10	
Clock Frequency	fc	XIN, XOUT	V_{DD} = 1.8 to 5.5 V		1.0	4.2	MHz
			V_{DD} = 2.7 to 5.5 V			8.0	
			V_{DD} = 4.5 to 5.5 V			16.0	
	fs	XTIN, XTOUT			30.0	34.0	kHz

Not Recommended for New Design

16.3 DC Characteristics

(V_{SS} = 0.0 V, Topr = -40 to 85 °C)

Parameter	Symbol	Pins	Condition	Min	Typ.	Max	Unit
Hysteresis Voltage	V_{HS}	Hysteresis input		–	0.9	–	V
Input Current	I_{IN1}	TEST	V_{DD} = 5.5 V, V_{IN} = 5.5 V/0 V	–	–	±2	μA
	I_{IN2}	Sink Open-drain, Tri-state					
	I_{IN3}	$\overline{RESET}$, $\overline{STOP}$					
Input Resistance	R_{IN}	$\overline{RESET}$ Pull-Up		100	220	450	kΩ
Output Leakage Current	I_{LO1}	Sink Open-drain port	V_{DD} = 5.5 V, V_{OUT} = 5.5 V	–	–	2	μA
	I_{LO2}	Tri-state port	V_{DD} = 5.5 V, V_{OUT} = 5.5 V/0 V	–	–	±2	
Output High Voltage	V_{OH}	Tri-state Port	V_{DD} = 4.5 V, I_{OH} = –0.7 mA	4.1	–	–	V
Output Low Voltage	V_{OL}	Except X_{OUT}, P0, P4, P2 Port	V_{DD} = 4.5 V, I_{OL} = 1.6 mA	–	–	0.4	
Output Low Current	I_{OL}	High Current Port (P0, P2, P4 Port)	V_{DD} = 4.5 V, V_{OL} = 1.0 V	–	20	–	mA
Supply Current in NORMAL1, 2 mode	I_{DD}		V_{DD} = 5.5 V V_{IN} = 5.3/0.2 V fc = 16 MHz fs = 32.768 kHz	–	7.5	9	
Supply Current in IDLE0, 1, 2 mode				–	5.5	6.5	
Supply Current in SLOW1 mode			V_{DD} = 3.0 V V_{IN} = 2.8 V/0.2 V fs = 32.768 kHz	–	8	20	μA
Supply Current in SLEEP1 mode				–	5	15	
Supply Current in SLEEP0 mode				–	4	13	
Supply Current in STOP mode			V_{DD} = 5.5 V V_{IN} = 5.3 V/0.2 V	–	0.5	10	

Note 1: Typical values show those at Topr = 25°C, V_{DD} = 5 V

Note 2: Input current (I_{IN1}, I_{IN3}): The current through pull-up or pull-down resistor is not included.

Note 3: I_{DD} does not include I_{REF} current.

Note 4: The supply current in SLOW 2 and SLEEP 2 mode are similar with the supply current in IDLE0, 1, 2 mode.

Not Recommended for New Design

16.4 AD Conversion Characteristics

(V_{SS} = 0.0 V, 4.5 V ≤ V_{DD} ≤ 5.5 V, Topr = –40 to 85°C)

Parameter	Symbol	Condition	Min	Typ.	Max	Unit
Analog Reference Voltage	V_{AREF}		A_{VDD}–1.0	–	A_{VDD}	V
Power Supply Voltage of Analog Control Circuit	A_{VDD}		V_{DD}			
Analog Reference Voltage Range (Note4)	ΔV_{AREF}		3.5	–	–	
Analog Input Voltage	V_{AIN}		V_{SS}	–	V_{AREF}	
Power Supply Current of Analog Reference Voltage	I_{REF}	V_{DD} = A_{VDD} = V_{AREF} = 5.5 V V_{SS} = 0.0 V	–	0.6	1.0	mA
Non linearity Error		V_{DD} = A_{VDD} = 5.0 V, V_{SS} = 0.0 V V_{AREF} = 5.0 V	–	–	±2	LSB
Zero Point Error			–	–	±2	
Full Scale Error			–	–	±2	
Total Error			–	–	±2	

(V_{SS} = 0.0 V, 2.7 V ≤ V_{DD} < 4.5 V, Topr = –40 to 85°C)

Parameter	Symbol	Condition	Min	Typ.	Max	Unit
Analog Reference Voltage	V_{AREF}		A_{VDD}–1.0	–	A_{VDD}	V
Power Supply Voltage of Analog Control Circuit	A_{VDD}		V_{DD}			
Analog Reference Voltage Range (Note4)	ΔV_{AREF}		2.5	–	–	
Analog Input Voltage	V_{AIN}		V_{SS}	–	V_{AREF}	
Power Supply Current of Analog Reference Voltage	I_{REF}	V_{DD} = A_{VDD} = V_{AREF} = 4.5 V V_{SS} = 0.0 V	–	0.5	0.8	mA
Non linearity Error		V_{DD} = A_{VDD} = 2.7 V, V_{SS} = 0.0 V V_{AREF} = 2.7 V	–	–	±2	LSB
Zero Point Error			–	–	±2	
Full Scale Error			–	–	±2	
Total Error			–	–	±2	

(V_{SS} = 0.0 V, 2.0 V ≤ V_{DD} < 2.7 V, Topr = –40 to 85°C)
(V_{SS} = 0.0 V, 1.8 V ≤ V_{DD} < 2.0 V, Topr = –10 to 85°C)

Parameter	Symbol	Condition	Min	Typ.	Max	Unit
Analog Reference Voltage	V_{AREF}		A_{VDD}–0.9	–	A_{VDD}	V
Power Supply Voltage of Analog Control Circuit	A_{VDD}		V_{DD}			
Analog Reference Voltage Range (Note4)	ΔV_{AREF}	1.8 V ≤ V_{DD} < 2.0 V	1.8	–	–	
		2.0 V ≤ V_{DD} < 2.7 V	2.0	–	–	
Analog Input Voltage	V_{AIN}		V_{SS}	–	V_{AREF}	
Power Supply Current of Analog Reference Voltage	I_{REF}	V_{DD} = A_{VDD} = V_{AREF} = 2.7 V V_{SS} = 0.0 V	–	0.3	0.5	mA
Non linearity Error		V_{DD} = A_{VDD} = 1.8 V, V_{SS} = 0.0 V V_{AREF} = 1.8 V	–	–	±4	LSB
Zero Point Error			–	–	±4	
Full Scale Error			–	–	±4	
Total Error			–	–	±4	

Note 1: The total error includes all errors except a quantization error, and is defined as a maximum deviation from the ideal conversion line.

Note 2: Conversion time is different in recommended value by power supply voltage.
About conversion time, please refer to “Register Configuration” in the section of AD converter.

Note 3: Please use input voltage to AIN input Pin in limit of V_{AREF} – V_{SS}.
When voltage of range outside is input, conversion value becomes unsettled and gives affect to other channel conversion value.

Note 4: Analog Reference Voltage Range: ΔV_{AREF} = V_{AREF} – V_{SS}

Note 5: When AD is used with V_{DD} < 2.7, the guaranteed temperature rauge varies with the operating voltage.

Not Recommended for New Design

16.5 AC Characteristics

(V_{SS} = 0 V, V_{DD} = 4.5 to 5.5 V, Topr = –40 to 85°C)

Parameter	Symbol	Condition	Min	Typ.	Max	Unit
Machine Cycle Time	tcy	NORMAL1, 2 mode	0.25	–	4	μs
		IDLE0, 1, 2 mode				
		SLOW1, 2 mode	117.6	–	133.3	
		SLEEP0, 1, 2 mode				
High Level Clock Pulse Width	t_{WCH}	For external clock operation (XIN input) fc = 16 MHz	–	31.25	–	ns
Low Level Clock Pulse Width	t_{WCL}					
High Level Clock Pulse Width	t_{WSH}	For external clock operation (XTIN input) fs = 32.768 kHz	–	15.26	–	μs
Low Level Clock Pulse Width	t_{WSL}					

(V_{SS} = 0 V, V_{DD} = 2.7 to 4.5 V, Topr = –40 to 85°C)

Parameter	Symbol	Condition	Min	Typ.	Max	Unit
Machine Cycle Time	tcy	NORMAL1, 2 mode	0.5	–	4	μs
		IDLE0, 1, 2 mode				
		SLOW1, 2 mode	117.6	–	133.3	
		SLEEP0, 1, 2 mode				
High Level Clock Pulse Width	t_{WCH}	For external clock operation (XIN input) fc = 8 MHz	–	62.5	–	ns
Low Level Clock Pulse Width	t_{WCL}					
High Level Clock Pulse Width	t_{WSH}	For external clock operation (XTIN input) fs = 32.768 kHz	–	15.26	–	μs
Low Level Clock Pulse Width	t_{WSL}					

(V_{SS} = 0 V, V_{DD} = 1.8 to 2.7 V, Topr = –40 to 85°C)

Parameter	Symbol	Condition	Min	Typ.	Max	Unit
Machine Cycle Time	tcy	NORMAL1, 2 mode	0.95	–	4	μs
		IDLE0, 1, 2 mode				
		SLOW1, 2 mode	117.6	–	133.3	
		SLEEP0, 1, 2 mode				
High Level Clock Pulse Width	t_{WCH}	For external clock operation (XIN input) fc = 4.2 MHz	–	119.05	–	ns
Low Level Clock Pulse Width	t_{WCL}					
High Level Clock Pulse Width	t_{WSH}	For external clock operation (XTIN input) fs = 32.768 kHz	–	15.26	–	μs
Low Level Clock Pulse Width	t_{WSL}					

Not Recommended for New Design

16.6 DC Characteristics, AC Characteristics (PROM mode)

16.6.1 Read operation in PROM mode

(V_{SS} = 0 V, Topr = –40 to 85°C)

Parameter	Symbol	Condition	Min	Typ.	Max	Unit
High level input voltage	V_{IH4}		2.2	–	V_{CC}	V
Low level input voltage	V_{IL4}		0	–	0.8	
Power supply	V_{CC}		4.75	5.0	5.25	
Program supply of program	V_{PP}					
Address access time	t_{ACC}	V_{CC} = 5.0 ± 0.25 V	–	1.5tcyc + 300	–	ns

Note: tcyc = 500 ns, f_{CLK} = 8 MHz

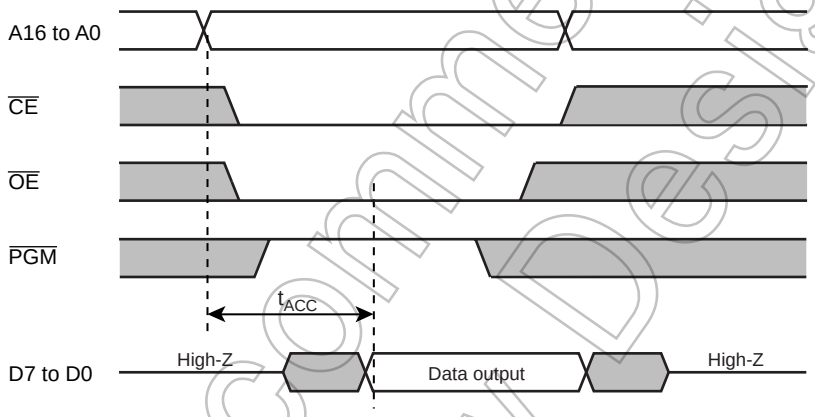

Not Recommended for New Design

16.6.2 Program operation (High-speed)

(Topr = 25±5°C)

Parameter	Symbol	Condition	Min	Typ.	Max	Unit
High level input voltage	V_{IH4}		2.2	–	V_{CC}	V
Low level input voltage	V_{IL4}		0	–	0.8	
Power supply	V_{CC}		6.0	6.25	6.5	
Program supply of program	V_{PP}		12.5	12.75	13.0	
Pulse width of initializing program	t_{PW}	V_{CC} = 6.0 V	0.095	0.1	0.105	ms

Note: tcyc = 500 ns, f_{CLK} = 8 MHz

High-speed program writing

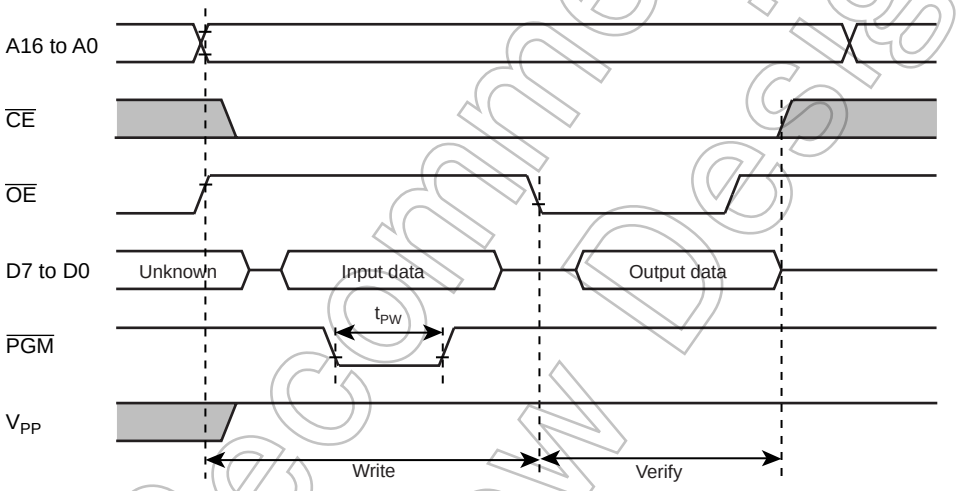

Note 1: The power supply of V_{PP} (12.75 V) must be set power-on at the same time or the later time for a power supply of V_{CC} and must be clear power-on at the same time or early time for a power supply of V_{CC}.

Note 2: The pulling up/down device causes a damage for the device while the voltage supplied to device (condition of especially V_{PP} = 12.75 V ± 0.25 V). Do not pull up/down at programming.

Note 3: Use the recommended adapter and mode.
Using other than the above condition may cause the trouble of the writting.

Not Recommended for New Design

16.7 Recommended Oscillating Conditions

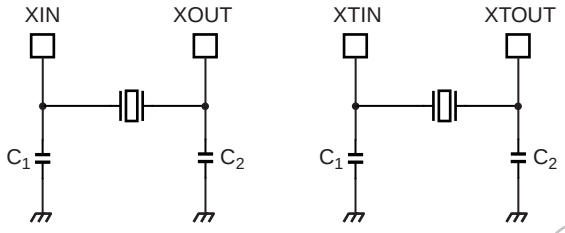

(1) High-frequency Oscillation (2) Low-frequency Oscillation

Note 1: A quartz resonator can be used for high-frequency oscillation only when V_{DD} is 2.7 V or above. If V_{DD} is below 2.7 V, use a ceramic resonator.

Note 2: To ensure stable oscillation, the resonator position, load capacitance, etc. must be appropriate. Because these factors are greatly affected by board patterns, please be sure to evaluate operation on the board on which the device will actually be mounted.

Note 3: For the resonators to be used with Toshiba microcontrollers, we recommend ceramic resonators manufactured by Murata Manufacturing Co., Ltd.
For details, please visit the website of Murata at the following URL:

http://www.murata.com

16.8 Handling Precaution

- The solderability test conditions for lead-free products (indicated by the suffix G in product name) are shown below.
  1. When using the Sn-37Pb solder bath
     Solder bath temperature = 230 °C
     Dipping time = 5 seconds
     Number of times = once
     R-type flux used
  2. When using the Sn-3.0Ag-0.5Cu solder bath
     Solder bath temperature = 245 °C
     Dipping time = 5 seconds
     Number of times = once
     R-type flux used

  Note: The pass criteron of the above test is as follows:
  Solderability rate until forming ≥ 95 %
- When using the device (oscillator) in places exposed to high electric fields such as cathode-ray tubes, we recommend electrically shielding the package in order to maintain normal operating condition.

Not Recommended for New Design

17. Package Dimensions

SDIP42-P-600-1.78 Rev 01

Unit: mm

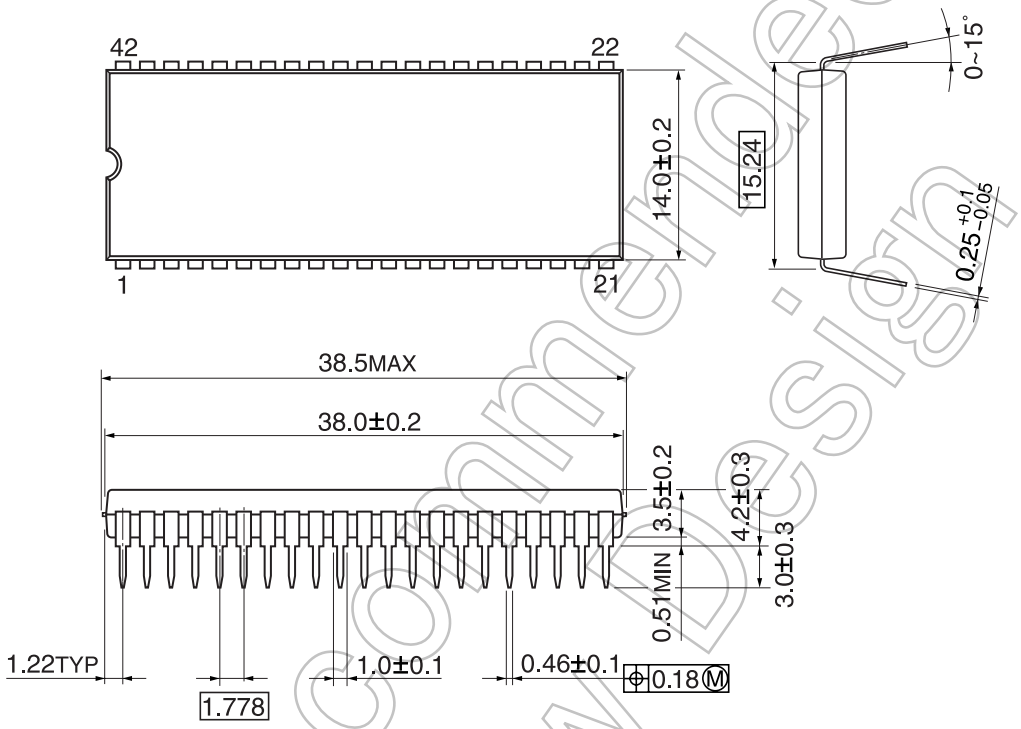

Not Recommended for New Design

Not Recommended for New Design

This is a technical document that describes the operating functions and electrical specifications of the 8-bit microcontroller series TLCS-870/C (LSI).

Toshiba provides a variety of development tools and basic software to enable efficient software development.

These development tools have specifications that support advances in microcomputer hardware (LSI) and can be used extensively. Both the hardware and software are supported continuously with version updates.

The recent advances in CMOS LSI production technology have been phenomenal and microcomputer systems for LSI design are constantly being improved. The products described in this document may also be revised in the future. Be sure to check the latest specifications before using.

Toshiba is developing highly integrated, high-performance microcomputers using advanced MOS production technology and especially well proven CMOS technology.

We are prepared to meet the requests for custom packaging for a variety of application areas.
We are confident that our products can satisfy your application needs now and in the future.

Not Recommended for New Design

Not Recommended
for New Design