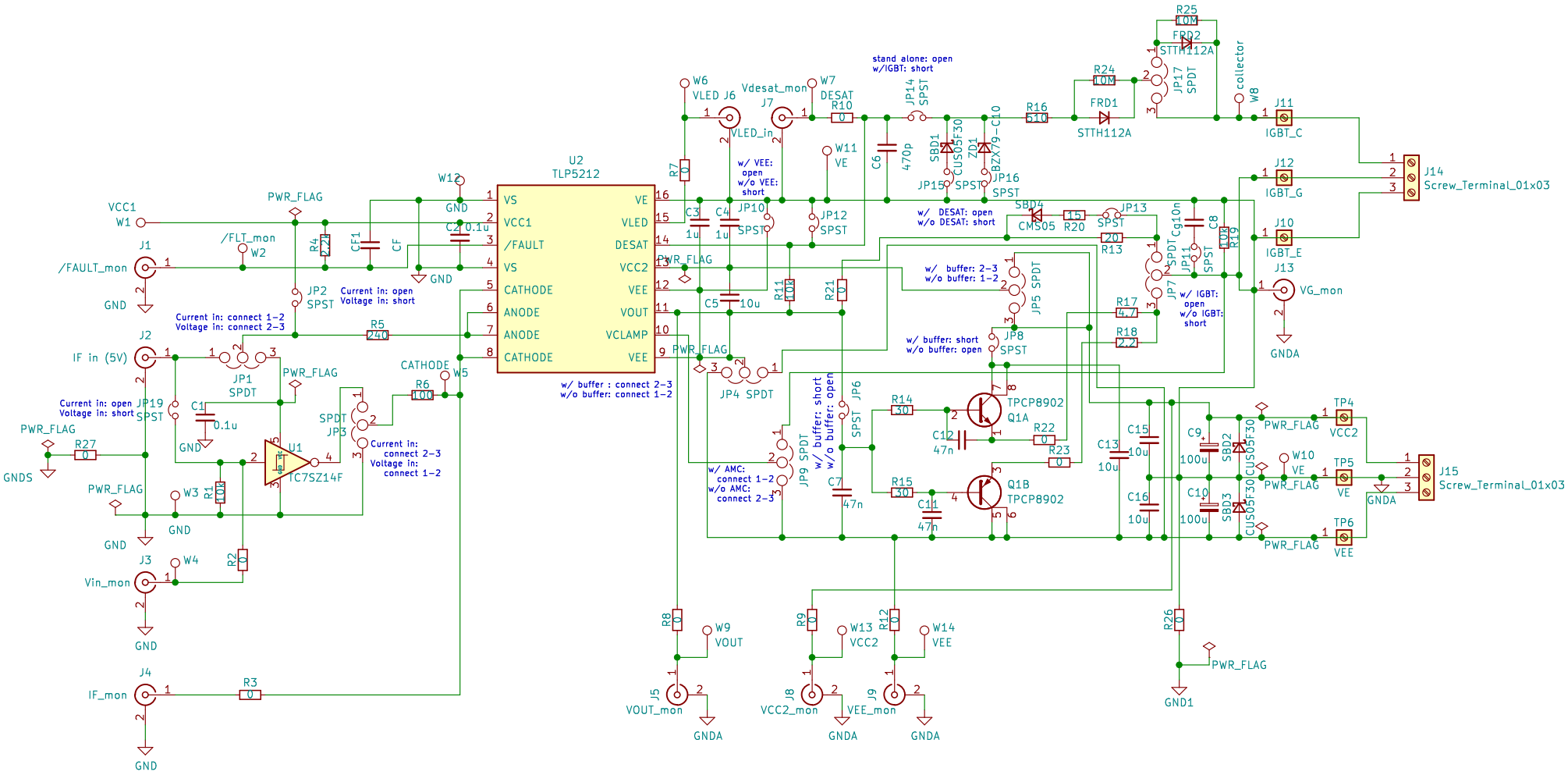
U2
TLP5212
VS
VCC1
/FAULT
VS
CATHODE
ANODE
ANODE
CATHODE
VE
VLED
DESAT
VCC2
VEE
VOUT
VCLAMP
VEE
w/ buffer : connect 2–3
w/o buffer: connect 1–2
VCC1
W1
J1
/FAULT_mon
GND
/FLT_mon
W2
PWR_FLAG
R4
2.2
CF1
CF
C2 0.1u
W12
GND
JP2
SPST
Current in: open
Voltage in: short
Current in: connect 1–2
Voltage in: connect 2–3
R5
240
J2
IF in (5V)
JP1
SPDT
PWR_FLAG
CATHODE
W5
R6
100
Current in: open
Voltage in: short
JP19
SPST
C1
0.1u
GND
SPDT
JP3
Current in:
connect 2–3
Voltage in:
connect 1–2
PWR_FLAG
R27
0
GNDS
U1
TC7SZ14F
PWR_FLAG
W3
R1
100
GND
R2
0
J3
W4
Vin_mon
GND
J4
IF_mon
R3
0
GND
W6
VLED J6
VLED_in
Vdesat_mon
J7
W7
DESAT
R10
0
W11
VE
R7
0
w/ VEE:
open
w/o VEE:
short
C3
1u
C4
1u
JP10
SPST
JP12
SPST
C5
10u
R11
100
R21
0
PWR_FLAG
JP4 SPDT
JP9 SPDT
w/ AMC:
connect 1–2
w/o AMC:
connect 2–3
w/ buffer: short
w/o buffer: open
JP6
SPST
C7
47n
R8
0
W9
VOUT
J5
VOUT_mon
GNDA
R9
0
W13
VCC2
J8
VCC2_mon
GNDA
R12
0
W14
VEE
J9
VEE_mon
GNDA
stand alone: open
w/IGBT: short
JP14
SPST
C6
470p
SBD1
CUS05F30
ZD1
BZX79-C10
JP15
SPST
JP16
SPST
R16
510
R24
10M
FRD1
STTH112A
R25
10M
FRD2
STTH112A
JP17
SPDT
collector
W8
J11
IGBT_C
J12
IGBT_G
J10
IGBT_E
J14
Screw_Terminal_01x03
w/ DESAT: open
w/o DESAT: short
SBD4
CMS05
R20
15
JP13
SPST
R13
20
Cg
10n
C8
10u
R19
10k
JP11
SPST
JP7
SPDT
w/ IGBT:
open
w/o IGBT:
short
J13
VG_mon
GNDA
w/ buffer: 2–3
w/o buffer: 1–2
JP5 SPDT
R17
4.7
R18
2.2
w/ buffer: short
w/o buffer: open
JP8
SPST
R14
30
R15
30
C12
47n
C11
47n
R22
0
R23
0
TPCP8902
Q1A
Q1B
TPCP8902
C13
10u
C15
10u
C16
10u
C9
100u
C10
100u
SBD2
CUS05F30
SBD3
CUS05F30
PWR_FLAG
TP4
VCC2
W10
VE
TP5
VE
TP6
VEE
J15
Screw_Terminal_01x03
GNDA
R26
0
PWR_FLAG
GND1